Digital LCD Timer DIN W48×H48mm

■ Features

- Upgraded power supply
  : 24-240VAC 50/60Hz, 24-240VDC universal
- Easy to switch Up/Down mode
- 10 programmable output modes
  and timing ranges (LE3S)
- Selectable function by front digital switches
- Graphic output contact status display (NO/NC)
- BAR graph display of time progressing in 5% increments
- Compact size (length: 74mm)

⚠ **Please read "Caution for your safety" in operation manual before using.**

■ Ordering Information

LE 3 S □

Output	No mark	Time-limit SPDT (1c)
	A	Time-limit DPDT (2c)
	B	Time-limit SPDT (1c), Instantaneous SPDT (1c)
Size	S	DIN W48×H48mm
Digit	3	999 (3-digit)
Item	LE	LCD timer (digital switch type)

※Sockets (PG-08, PS-08(N), PS-M8) are sold separately.

■ Specifications

Model		LE3S	LE3SA	LE3SB
Function		**Multi time and operation**	**Multi time range, Power ON Delay operation**	
Display method		LCD display (character size: W4×H8mm)		
Power supply		24-240VAC 50/60Hz, 24-240VDC universal		
Allowable voltage range		90 to 110% of rated voltage		
Power consumption		Max. 2.5VA (24-240VAC 50/60Hz), Max. 1W (24-240VDC)	Max. 3.3VA (24-240VAC 50/60Hz), Max. 1.5W (24-240VDC)	
Return time		Max. 200ms	Max. 100ms	
Min. input signal width	START	Approx. 20ms	—	
	INHIBIT			
	RESET			
Input	START	• No-voltage input Impedance at short-circuit: Max. 1kΩ Residual voltage: Max. 0.5VDC Impedance at open-circuit: Min. 100kΩ	—	
	INHIBIT			
	RESET			
Timing operation		Signal ON Start	Power ON Start	
Control output	Contact type	Time limit SPDT (1c)	Time limit DPDT (2c)	Time limit SPDT (1c), Instantaneous SPDT (1c)
	Contact capacity	250VAC 5A resistive load	250VAC 3A resistive load	
Relay life cycle	Mechanical	Min. 10,000,000 operations		
	Electrical	Min. 100,000 operations (250VAC 5A resistive load)	Min. 100,000 operations (250VAC 3A resistive load)	
Output mode		10 operation modes	Power ON Delay mode fixed	
Environ-ment	Ambient temp.	-10 to 55℃, storage: -25 to 65℃		
	Ambient humidity	35 to 85%RH		
Accessory		Bracket		

※Environment resistance is rated at no freezing or condensation.

■ Specifications

Model		LE3S	LE3SA	LE3SB
Repeat error		Max. ±0.01% ±0.05sec (for Power ON Start) Max. ±0.005% ±0.03sec (for Signal ON Start)	Max. ±0.01% ±0.05sec	
SET error				
Voltage error				
Temperature error				
Insulation resistance		Over 100MΩ (at 500VDC megger)		
Dielectric strength		2,000VAC 50/60Hz for 1 minute		
Noise immunity		±2kV the square wave noise (pulse width: 1μs) by the noise simulator		
Vibration	Mechanical	0.75mm amplitude at frequency of 10 to 55Hz (for 1 min) in each X, Y, Z direction for 1 hour		
	Malfunction	0.5mm amplitude at frequency of 10 to 55Hz (for 1 min) in each X, Y, Z direction for 10 min		
Shock	Mechanical	300m/s² (approx. 30G) in each X, Y, Z direction for 3 times		
	Malfunction	100m/s² (approx. 10G) in each X, Y, Z direction for 3 times		
Approval		CE c UL us		
Unit weight		Approx. 100g	Approx. 105g	

■ Connections

● **LE3S**

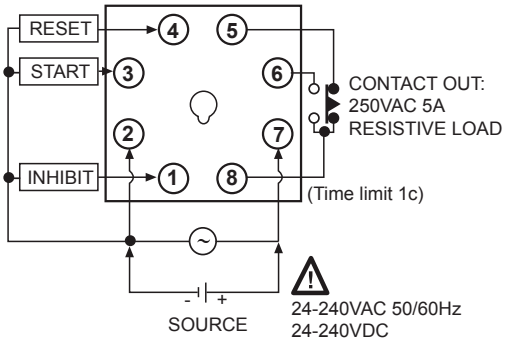

● **LE3SA**

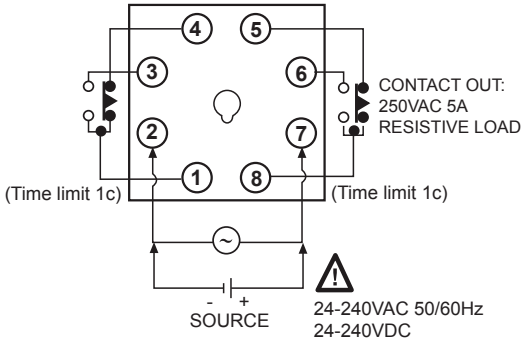

● **LE3SB**

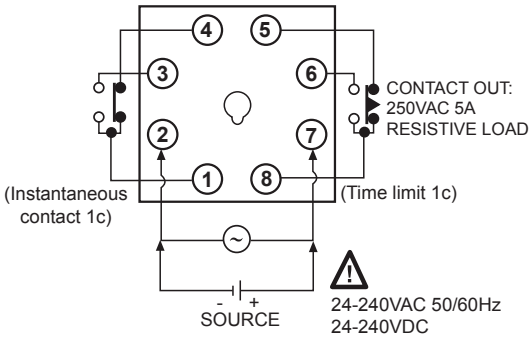

■ Input Connections (LE3S Only)

◎ Solid-state input

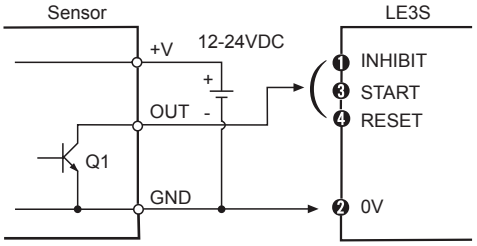

- Q1 is ON: Operating
- Sensor: NPN open collector output

◎ Contact input

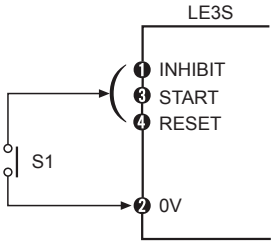

- S1 is ON: Operating
- S1: Micro switch, push button switch, relay

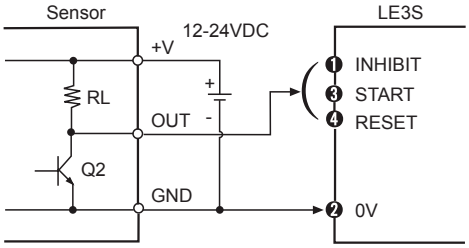

- Q2 is ON: Operating
- Sensor: NPN universal output

● Input level

No voltage input	● Short-level (transistor is ON) • Residual voltage: Max. 0.5V • Impedance: Max. 1kΩ
	●Open-level (transistor is OFF) • Impedance: Min. 100kΩ
Contact input	Please use reliable contacts enough to flow 5VDC 1mA of current.

■ Dimensions

(unit: mm)

● Bracket

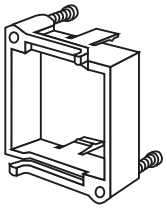

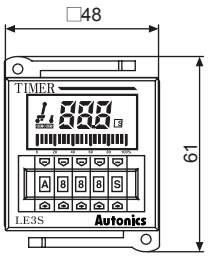

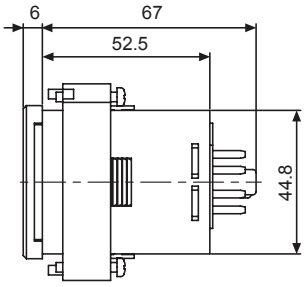

● Panel cut-out

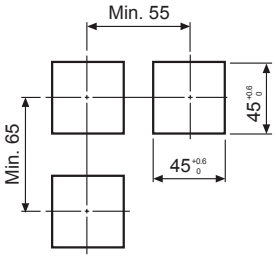

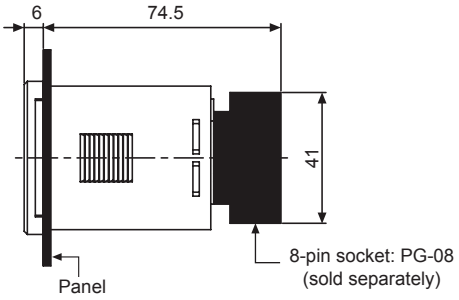

■ Unit Description

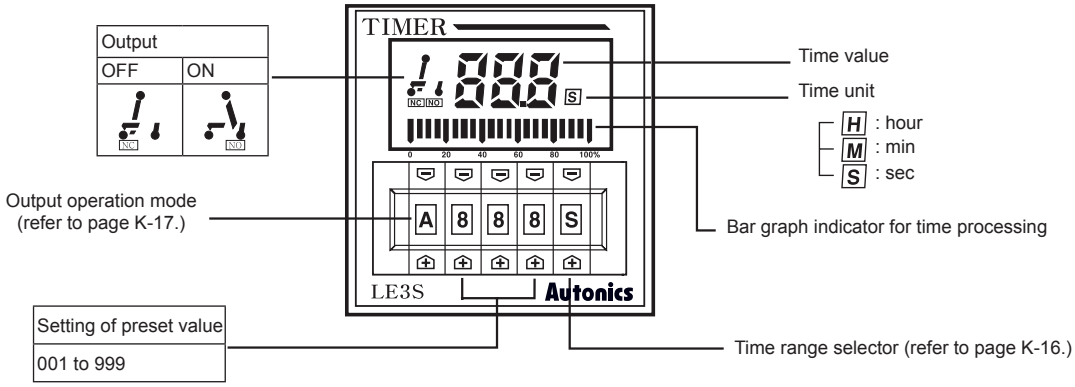

■ Up/Down Mode

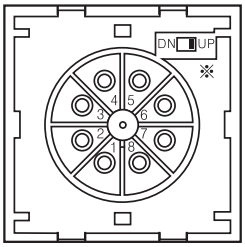

※Output operate as Up or Down mode by Up/Down switch location.

Up	Down
DN ■ UP	DN ■ UP

⚠ **Power must be cut off.**

● **Default specifications**

LE3S	LE3SA, LE3SB
Up/Down mode: Up	• Up/Down mode: Up • Output mode: A mode (fixed) ※Down mode is option.

■ Output Operation Mode Selection

Please select operation mode by press the left of ⊕, ⊖ keys in front panel.

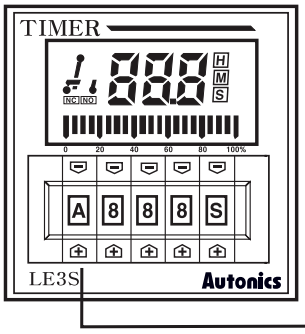

Output operation mode	
A	ON Delay Ⓐ
B	Interval Delay Ⓐ
C	ON Delay Ⓑ
D	Flicker Ⓐ
E	Flicker Ⓑ
F	One-shot Out Flicker
H	OFF Delay
K	ON/OFF Delay
L	Interval Delay Ⓑ
N	Integration Time

※Refer to the K-17 to 18 for details about output operation mode.
- ON Delay Ⓐ of A mode and ON Delay Ⓑ of C mode are different.
- Interval delay Ⓐ of B mode and Interval Delay Ⓑ of L mode are different.
- Flicker Ⓐ of D mode and Flicker Ⓑ of E mode are different.

※Output mode Ⓐ is operated as time progresses only when the START signal applied continuously.
※Output mode Ⓑ is operated as time progresses even the START signal is applied as One-shot signal. (one-shot input signal should be over 20ms.)

■ Time Specifications And Time Range

Please select time unit and range by press the right of ⊕, ⊖ keys in front panel.

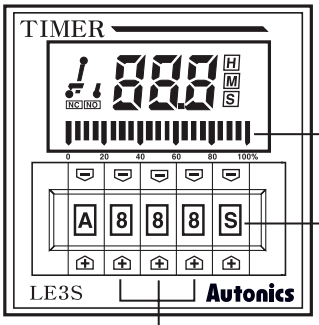

BAR graph: Display % for the time progressing against setting time

Time Range mode	
0.01s	0.01sec to 9.99sec
0.1s	0.1sec to 99.9sec
s	1sec to 999sec
0.1m	0.1min to 99.9min
m	1min to 999min
0.1h	0.1hour to 99.9hour
h	1hour to 999hour
10h	10hour to 9990hour
S	0 min 01sec to 9min 59sec
M	0 hour 01min to 9hour 59min

Time setting digital switch

● Setting of operation time: Please select operation time by press the center of 3 ⊕, ⊖ keys in front panel.
※When using this unit with 20.0 sec of operation time.
After selecting 0.1 s as time range, then set digital switches as 20.0 sec
In this case, it is convenient to put a decimal point as below figure.

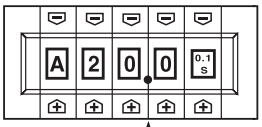

Mark a decimal point.

● Bar graph display: Display the progress rate of time for setting time with bar, it is calculated as below for 1bar.
Setting value (operation time) ÷ 20 (total number of bars) = The time for 1 bar is lighted.

■ LE3SA, LE3SB Output Operation Mode

t=Setting time, Rt=Reset time (min. 100ms)

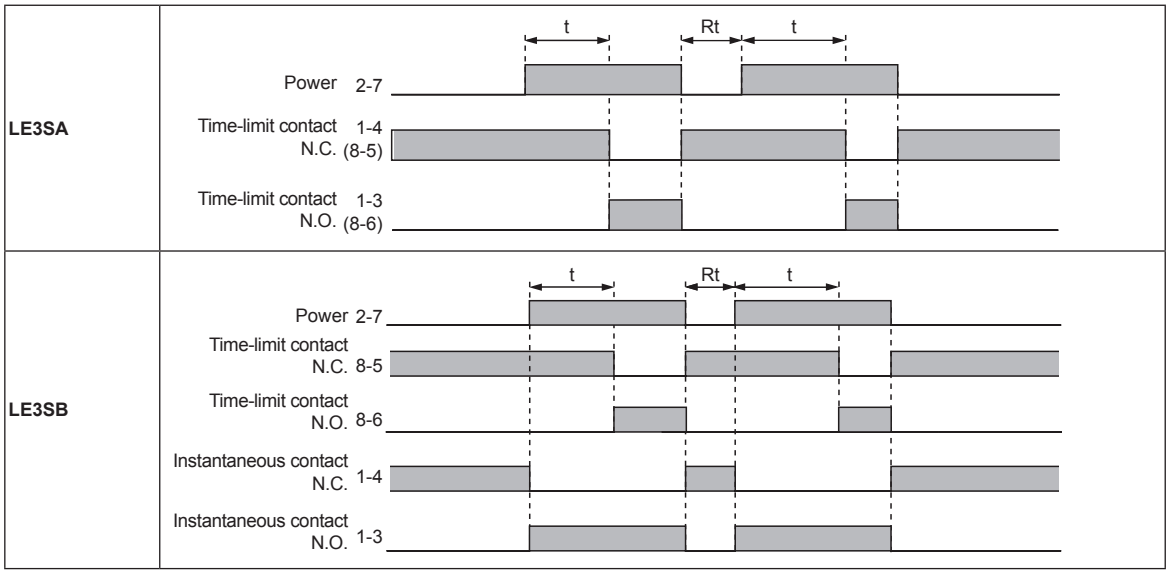

■ LE3S Output Operation Mode

T=Setting time, T >Ta

Mode	Time chart
A **ON Delay** Ⓐ	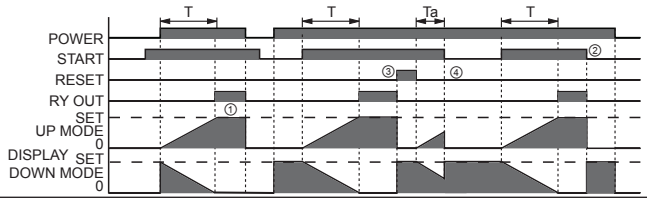 1. Time progresses when START signal is ON. 2. The output will be ON when the setting value is equal to the display value. (Position ①) 3. When the RESET signal is ON, the display value is returned to the initial state. (Position ③) 4. When the setting value is equal to the display value, if START signal is OFF, the output turns off, the display value is held. (Position ②) **※If START signal is OFF when the output is OFF the display value is returned to initial state (Position ④).**
B **Interval Delay** Ⓐ	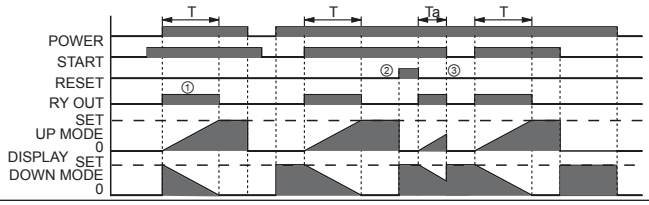 1. The output turns ON and time progresses when START signal is ON. 2. The output will be ON when the setting value is equal to the display value. (Position ①) 3. When the RESET signal is ON, the display value is returned to the initial state. (Position ②) **※If START signal is OFF when the output is OFF the display value is returned to initial state. (Position ③)**
C **ON Delay** Ⓑ	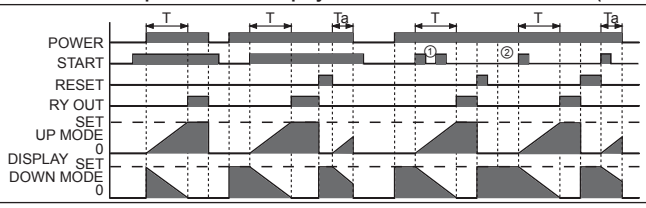 1. Time proceeds when START signal is ON. 2. The output will be ON when the setting value is equal to the display value. (Position ①) 3. When the RESET signal is ON, the display value is returned to the initial state. **※When start signal is applied repeatedly (Position ①), only the initial signal is recognized.** **※Even if the START signal is not applied, time progresses. (Position ②)**
D **Flicker** Ⓐ	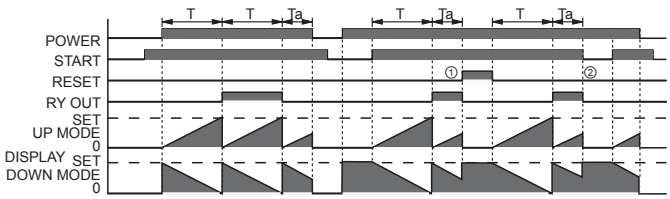 1. Time progresses repeatedly when the START signal is ON. 2. The output operates from N.C. to N.O., and from N.O. to N.C. repeatedly. 3. If RESET signal is ON, it is returned to initial state. (Position ①) **※If the START signal is OFF, the display value and output is returned to initial state. (Position ②)**
E **Flicker** Ⓑ	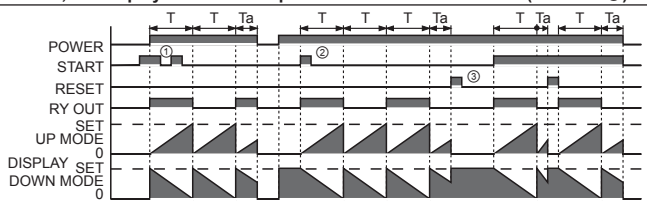 1. Time progresses repeatedly when the START signal is ON. 2. The output operates from N.C. to N.O., and from N.O. to N.C. repeatedly. 3. If RESET signal is ON, it is returned to initial state. (Position ③) **※When START signal is applied repeatedly, only the initial signal is recognized. (Position ①)** **※Even if the START signal is not applied, time progresses. (Position ②)**

※Initial state: Output is OFF, the display value is "0". (UP mode). The output is OFF and the display value is the setting value (DOWN mode)
※When using D, E output operation modes, if the time is set too short, the output may not work properly. Please set the time at least over 100ms.

■ LE3S Output Operation Mode

T=Setting time, T=T1+T2+T3, T >Ta, T >Ta+Tb

Mode	Time chart
F **One-shot Out Flicker**	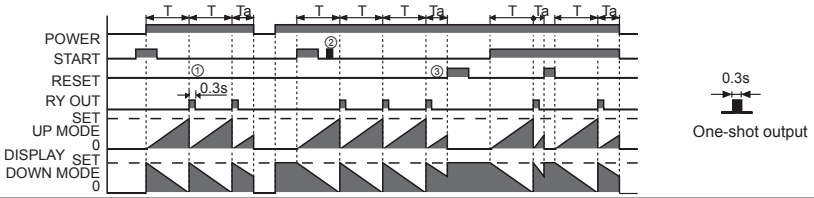 1. Time progresses from initial value to the preset value repeatedly and the output operates as one-shot (0.3 sec), when the START signal is ON. (Position ①) 2. If the RESET signal is ON, it is returned to initial state. (Position ③) **※When START signal is applied repeatedly, only the initial signal is recognized. (Position ②)**
H **OFF Delay**	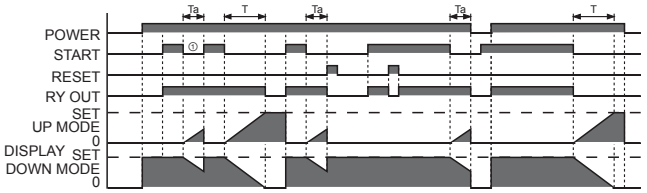 1. The START signal & the output are ON at the same time. The output will return and the display value is held after the setting time. 2. If the RESET signal is ON, the display value is returned to initial state. **※If the START signal is applied continuously, the output will be ON but time is not progressed.**
K **ON-OFF Delay**	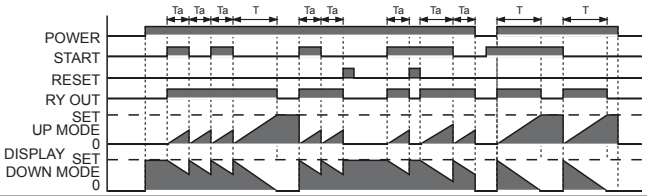 1. When the START signal is ON the output is ON the output will be reset and display value is held when setting value is equal to display value. 2. The START signal turns OFF, the output turns ON, the output will be reset and display value is held when setting value is equal to display value. 3. If RESET signal is ON, it is returned to initial state. **※If START signal is applied repeatedly, output keeps ON but be sure that the time will be initialized.**
L **Interval Delay** Ⓑ	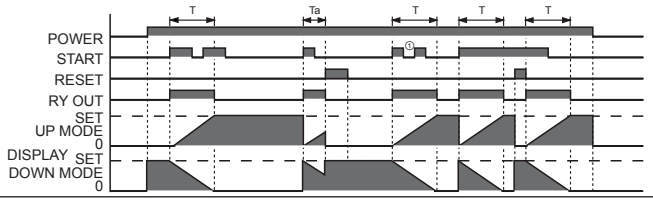 1. When START signal is ON, the output turns ON and the time progresses at the same time. 2. When the time reaches at the preset value the output will be reset, and the display value is held. 3. If RESET signal is applied, the display value is returned to initial state. **※When START signal is applied repeatedly, only the initial signal is recognized. (Position ①)**
N **Integration Time**	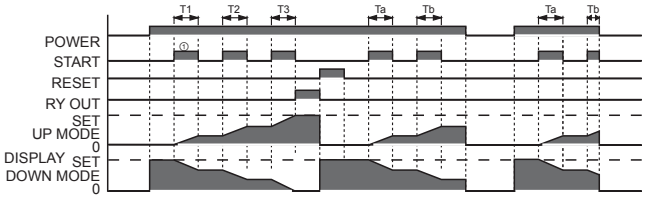 1. When START signal is ON, time progresses. 2. If START signal turns off before the display value reaches the setting value, the time (display value) will be held. 3. If RESET signal is ON, it is returned to initial state.

※Initial state: The output is OFF, the display value is "0". (UP mode) The output is OFF and the display value is setting value. (DOWN mode)
※When using F output operation modes, if the time is set too short, the output may not work properly. Please set the time at least over 100ms.

■ Proper Usage

⚠ Caution

It may cause electric shock if touching the input signal terminal (between start, reset, inhibit and terminal ②) when the power is supplied.

◎ Power connection

- Connect AC power line between (②-⑦) for LE3S AC power type. But please aware power connection for DC power type. (② ← ⊖ , ⑦ ← ⊕)
- When turning off power, be sure about inductive voltage, residual voltage between terminal (②-⑦), it may cause problem with low voltage because power consumption is low and impedance is high. (if using power line in with another high voltage line or energy line in the same conduit, it may cause inductive voltage. Therefore please use separate conduit for power line.)
- Power ripple should be under 10% and power supply should be within range of allowable voltage for DC power type.
- Please supply power quickly as using a switch or relay contact, otherwise it may cause timing error.
- When using SSR (solid state relay) for switching power source of Timer, dielectric strength voltage should be 2 times higher than power source.

◎ Input/Output

- Please check operation mode of this unit before connecting the power.
- If setting「000」for operation time, output may not work.
- When using a relay contact as input signal, please use reliable contact enough to flow 5VDC 1mA of current. (short circuited: Contact resistance under 1kΩ, Open circuit: Residual voltage under 0.5V)
- In case of connecting START terminal (③) and power terminal (②) of LE3S, do not start time at the same time applying power. Please use relay contact or transistor to start. (time error occurs when time starts the moment power is supplied.)
- When power is applied to LE3SA, LE3SB, it starts to operate,please check operation specification before using. (it may cause breakdown of peripheral device when power is applied without any check.)

- LE3S is transformer-less type, therefore please check following for connecting a relay contact, input signal and transistor.
- When connecting 2 or more than 2 Timers with 1 relay contact for input or transistor, please connect as following <Figure. 2 >.

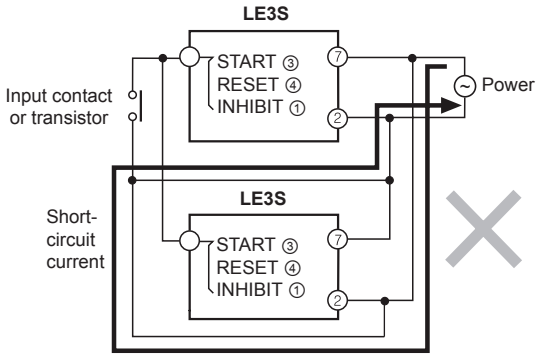

< Figure. 1 >

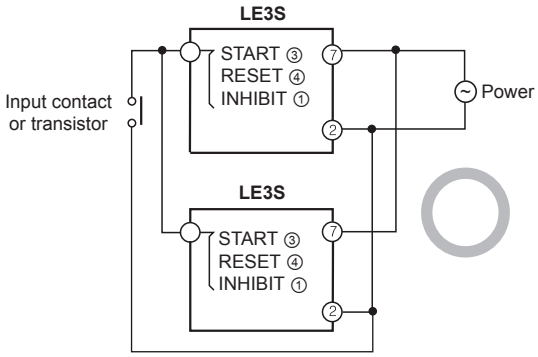

< Figure. 2 >

- Please use transformer with primary and secondary isolated power for input.

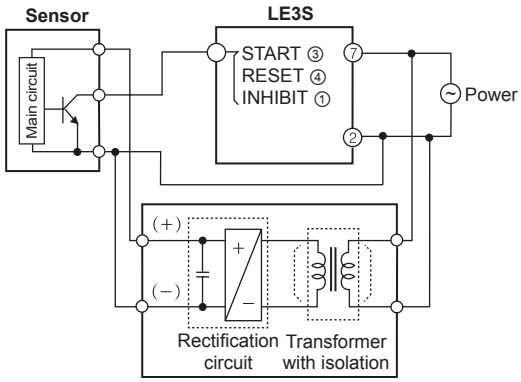

< Sensor power supply device>