ALTRA INDUSTRIAL MOTION

Standard Worm Gear Speed Reducers

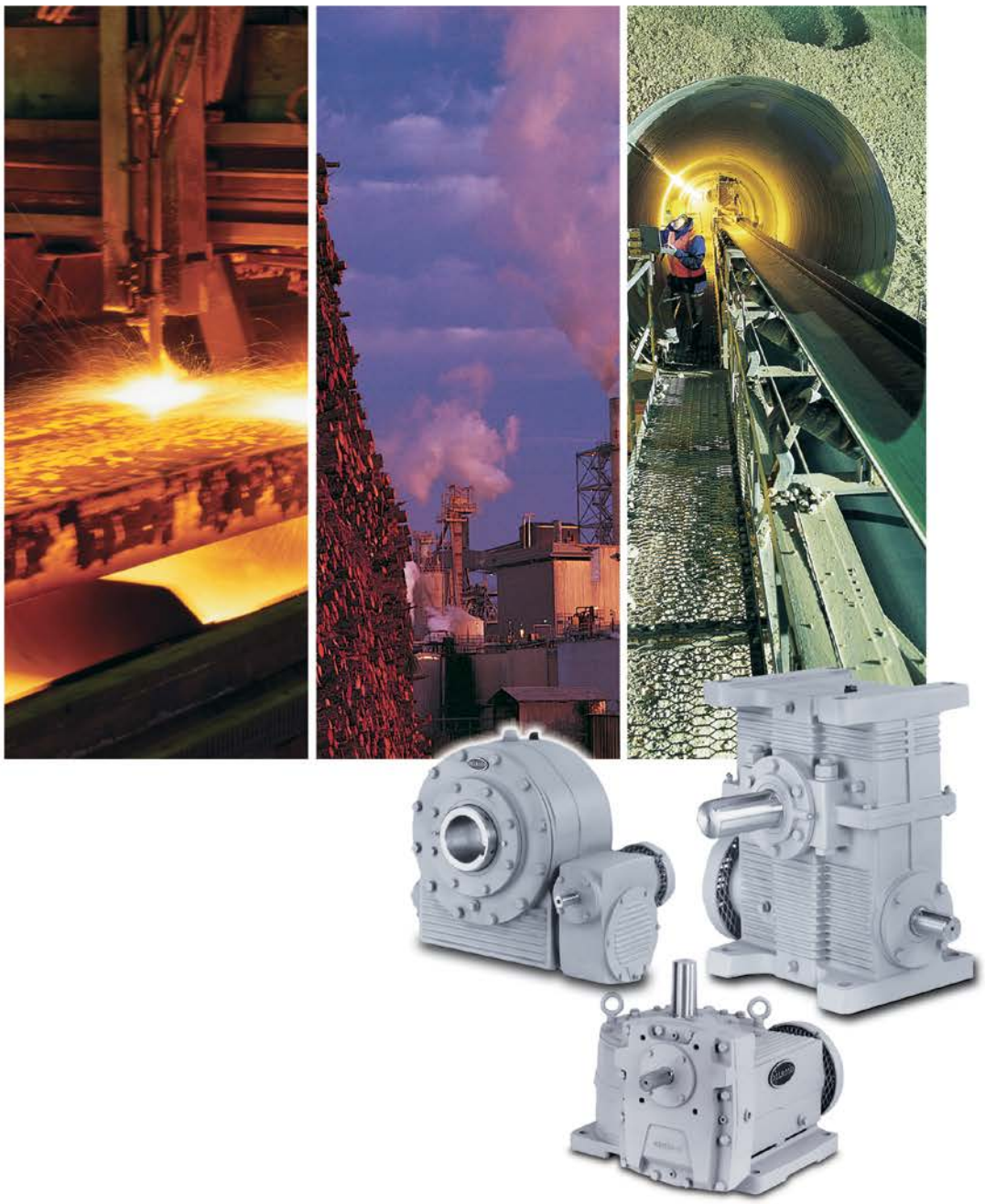

Delroyd Worm Gear®
Altra Industrial Motion

Worm Gear Speed Reducers

Single, Double and Triple Worm Gearing

Standard Features

- Single, Double and Triple Reductions
- 2” to 20” Center Distances
- Ratios of 5:1 to 175,000:1
- Drywell Construction on Vertical Units
- Multi-Mounting Configurations
- Solid Shaft and Hollow Shaft Designs
- Fan Cooled
- Oil Level Sight Glass
- 30,000 PSI Gray Cast Iron Housings
- High Strength Alloy Steel on Input and Output Shafts
- Centrifugally Cast Phosphorous Bronze Gears
- High Shock Load Capacity
- “C” Face Motor Flanges
- Motor Scoops

Reliability and Versatility

Over the years, Delroyd Worm Gear Speed Reducers have developed an unmatched reputation for reliability and versatility. These years of experience assure you of a proven design and reliable service.

The exclusive use of the involute helicoid thread form (with leaving side contact) on the worm & gear, provides for high efficiencies and long service life. The hardened, ground and polished alloy steel worm develops a smooth, work hardened surface on the bronze gear. For this reason, the worm gears wear in and improve with prolonged service while other gears are wearing out.

Delroyd offers a wide selection of model configurations, sizes, ratios and accessories from our standard product line.

Call Our Toll-Free Application Hotline:

800-432-0121

www.delroyd.com

2221 Niagara Falls Boulevard
Niagara Falls, NY 14302 - USA
716-298-4100

Delroyd Worm Gear®
Altra Industrial Motion

Delroyd Worm Gear Speed Reducers
Standard Units in Cast Iron Cases

Single Reduction Speed Reducers

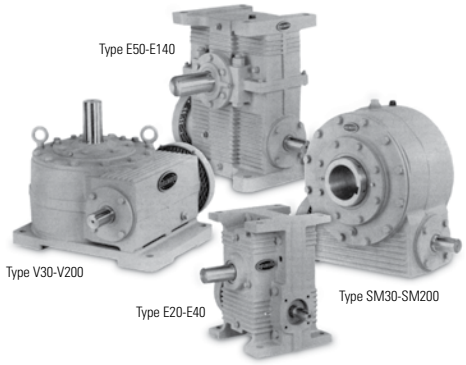

Helical Worm Speed Reducers

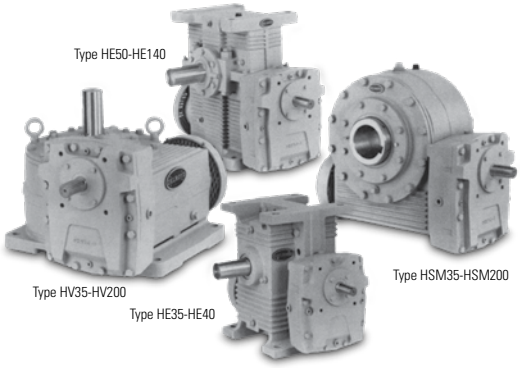

Double Worm Speed Reducers

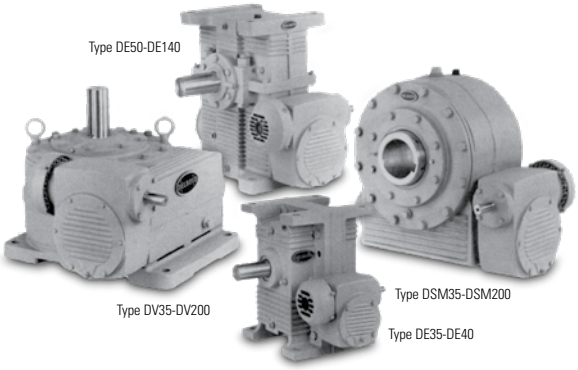

Triple Reduction Speed Reducers

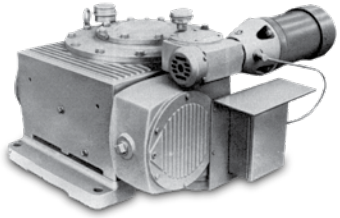

Contents

Application Data Form
(Request for Quotation)..... 2

Introduction 3
Standard Specifications..... 10
Selection Information 11-21

Single Reduction Speed Reducers
Rating Tables..... 22-28
Drawings and Dimensions 29-40

Helical Worm Speed Reducers
Rating Tables..... 41-54
Drawings and Dimensions 55-65

Double Worm Speed Reducers
Rating Tables..... 66-80
Drawings and Dimensions 80-86

Triple Reduction Speed Reducers
Rating Tables..... 87-89
Drawings and Dimensions 90

BT Pinch Roll Reduction Units 91

P Mixer Drive Units..... 92-96

For Lubrication Recommendations contact Delroyd Worm Gear Directly at 800-432-0121

Application Data Power Transmission Design Requirements

Gear Set/Speed Reducer Application

Delroyd Worm Gear
PO Box 1032
Niagara Falls, NY USA 14302-1032
Tel: 716.298-4100
Fax: 716.298-4101

Please photocopy this page and complete the data below. Forward information to address/number above for prompt action. We will contact you with our recommendations for your application.

☐ Gear Set Quantity to be purchased _____ Delivery required _____
☐ Speed Reducer Quantity to be purchased _____ Delivery required _____

1. Prime Mover _____ Driven Load _____
2. Horsepower Transmitted: _____
   Motor HP _____ RPM _____ Motor Starting Torque _____
   Motor Frame Size _____ Brake Size _____
3. Normal Reducer Input Speed _____
4. Duty: ☐ Continuous ☐ Intermittent _____ Hours/Day _____ Minutes/Hour _____ Starts/Hour _____ Days/Week
5. AGMA Load Class: ☐ Uniform ☐ Moderate Shock ☐ Heavy Shock
6. Service Factor _____ ☐ From Above Data ☐ Required by Customer's Spec.
7. Output Torque Load _____
8. Ratio: _____:1 (± _____ %) ☐ Decrease ☐ Increase
9. Noise Limitations _____
10. Hours Life Expectancy _____ at _____ % of Rated Load
11. Environmental Conditions: ☐ Indoors ☐ Outdoors
    Temperature: High _____ °F Low _____ °F Other _____
12. Specifications to be adhered to:
    ☐ AGMA ☐ Other ☐ MIL STD ☐ Bureau Ships ☐ OSHA
13. Output Shaft Overhung Load _____ lbs. at _____" from centerline or reducer.
14. Output Shaft Axial Thrust Load _____ lbs.
15. ☐ Stationary ☐ Mobile ☐ "G" Loading _____
16. Lube Oil Available: ☐ No ☐ Yes If Yes, what kind of oil? _____
    Pressure _____PSI Flow _____GPM Temp _____°F Filtered: ☐ Yes ☐ No
17. Oil Cooler Available: ☐ No ☐ Yes
18. Envelope Requirements _____
    (Include sketch if possible.)
19. Input Shaft: ☐ Vertical (Up) ☐ Vertical (Down) ☐ Horizontal
    ☐ Single-Extended ☐ Double-Extended
    ☐ Other Specials (Describe) _____
20. Output Shaft: ☐ Vertical (Up) ☐ Vertical (Down) ☐ Horizontal
    ☐ Single-Extended ☐ Double-Extended
    ☐ Other Specials (Describe) _____
21. Special Paint Requirements _____
22. Export Boxing Required: ☐ Yes ☐ No
23. Please attach application sketch
24. Company Name _____ Your Name _____
    Address _____
    City _____ State _____ Zip _____
    Phone No. _____ Fax No. _____

Advantages of Delroyd Worm Gearing

Compactness and High Ratio Reduction
Single reduction worm gearing offers high ratio reduction with few moving parts in a close-coupled compact drive. The right angle arrangement of driving-to-driven machine requires a minimum of space. Input and output shafts can be extended in either or both directions in horizontal or vertical arrangements adaptable to any mounting requirement. Efficient motor speeds are reduced to slow speed requirements of many industrial machines in one reduction.

Double reduction units give a wider ratio range beyond practical single reduction limits. Compact right angle or parallel shaft arrangements are provided with the same versatility of shaft extensions.

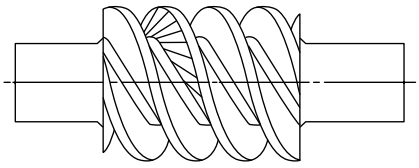

Involute Helicoid Straight Line Generation

Long, Quiet Life
All worm gears incorporated in Delroyd reducers are made from phosphor bronze. The hardened, ground and polished alloy steel worm develops a smooth, work hardened surface on the bronze. For this reason, worm gears wear in and improve with prolonged service while other gears are wearing out. Two or more teeth are in contact with the worm at all times, transmitting power by a continuous, quiet and shockless action. The flow of torque is smooth and free from angular velocity changes. Vibration, pulsation, chatter, and other customary gear noises are thus eliminated.

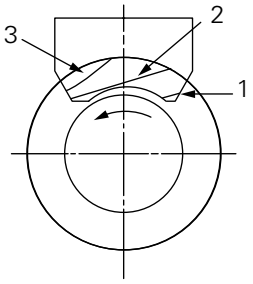

Proper Contact

High Shock Load Capacity
The Delroyd worm gear tooth form is such that the gear teeth are under a crushing, rather than a bending load. For this reason, extremely high momentary shock loads, damaging to many forms of gearing, can be successfully withstood. High momentary overloads seldom cause failure, as worm gear ratings are figured on the wear resistance of the gear teeth.

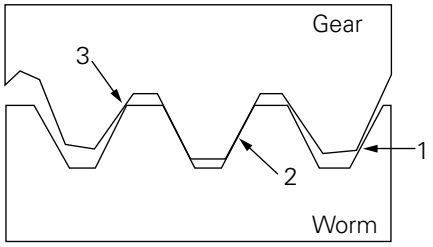

Closeness of Contact

Safety and Ease of Maintenance
The few moving parts are completely enclosed assuring oil tightness. Hazards of exposed moving parts are avoided. Reducers operate with minimum attention even under the most adverse conditions.

Interchangeability of Components
Standard parts are always available. All parts are manufactured to be interchangeable by use of limit gages retained as reference standards to assure precision and uniformity. The need for matched gearing is thus avoided. Worms and gears of different ratios can be readily interchanged if revision of speeds becomes necessary.

The involute helicoid ensures accuracy of profile and shape necessary to obtain proper contact and closeness of contact. More load carrying capacity, better accuracy, and longer life than any other thread form are assured.

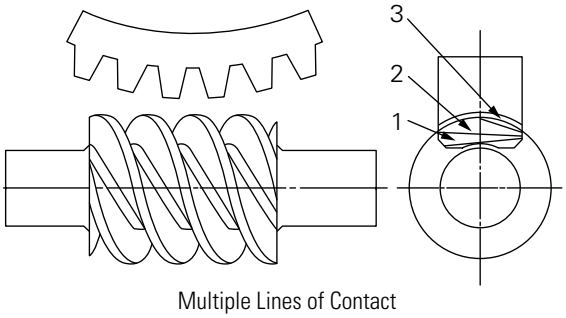

Multiple Lines of Contact

Conservative Delroyd ratings are based on more contact and greater torque arm in a given space. Delroyd contact is less sensitive to mounting dimension variations than any other thread form. Delroyd worms or gears can be replaced as interchangeable components without hours of lapping and running-in.

Models Available

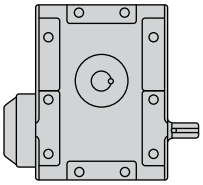

E20-E40

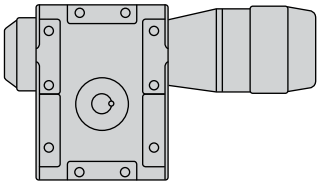

EMM20-EMM40

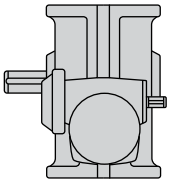

DE35-DE40

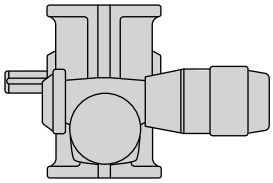

DEMM35-DEMM40

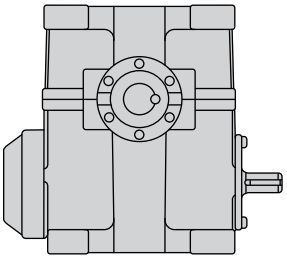

E50-E140

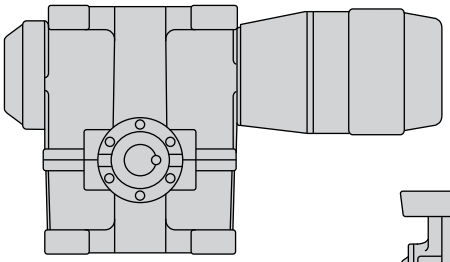

EMM50-EMM80

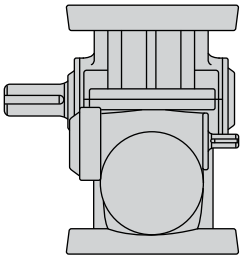

DE50-DE140

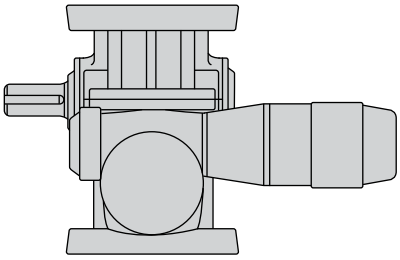

DEMM50-DEMM140

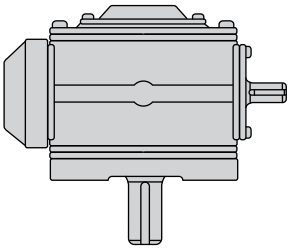

V30-V200

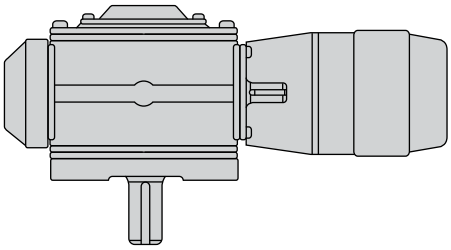

VMM30-VMM80

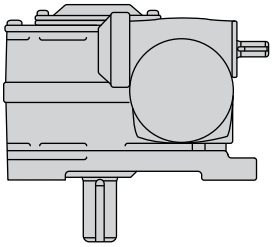

DV35-DV200

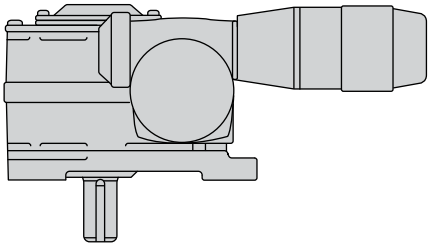

DVMM35-DVMM170

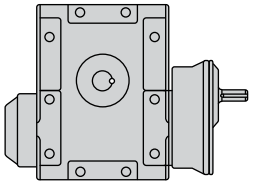

HE35-HE40

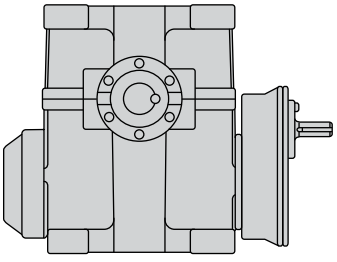

HE50-HE140

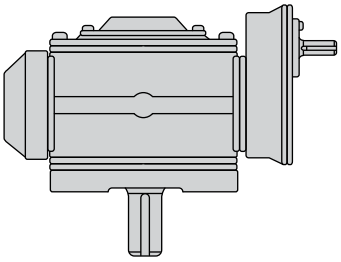

HV35-HV200

Models Available

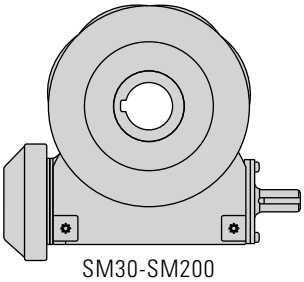

SM30-SM200

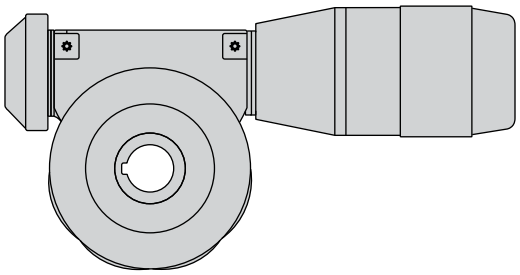

SMMM30-SMMM80

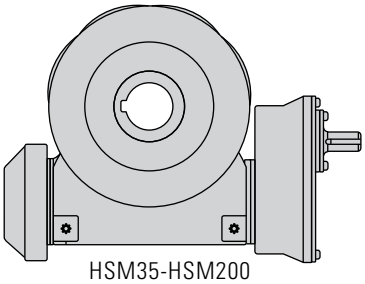

HSM35-HSM200

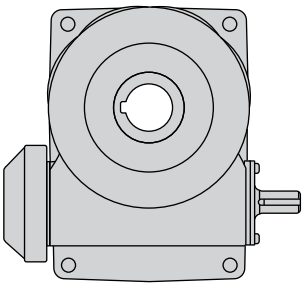

SMF30-SMF200

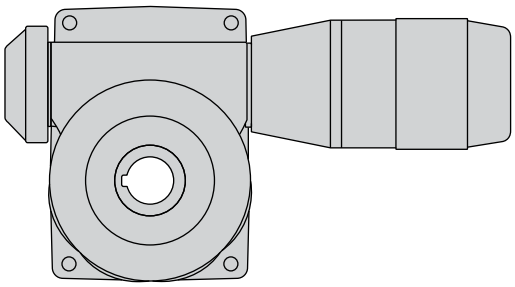

SMFMM30-SMFMM80

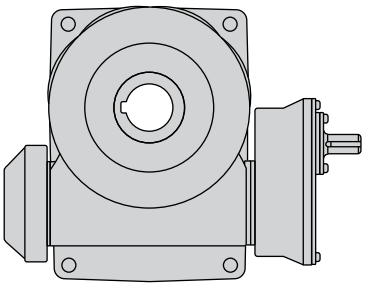

HSMF35-HSMF200

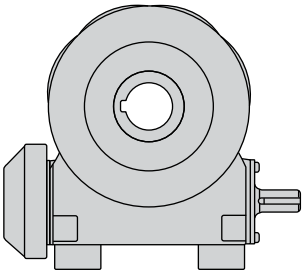

SMB30-SMB200

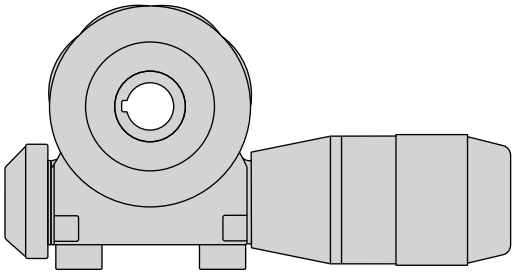

SMBMM30-SMBMM80

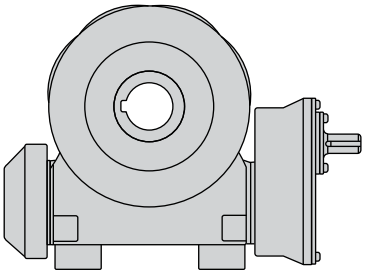

HSMB35-HSMB200

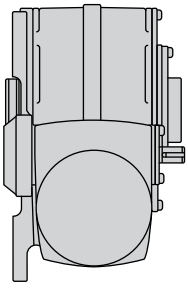

DSMF35-DSMF200

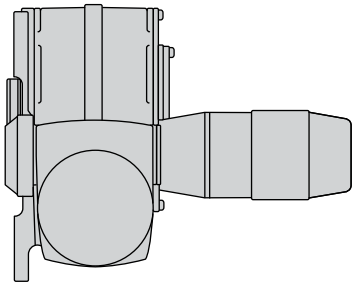

DSMFMM35-DSMFMM170

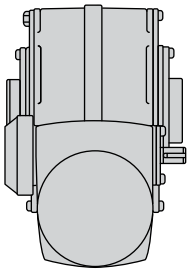

DSM35- DSM200

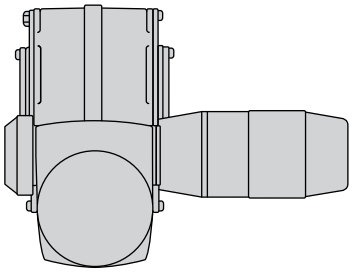

DSMMM35-DSMMM170

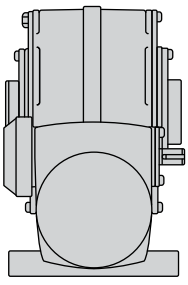

DSMB35-DSMB200

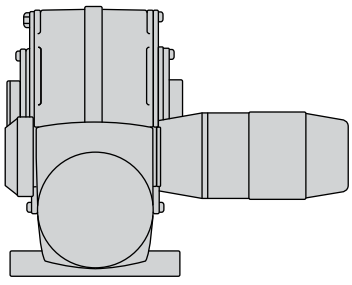

DSMBMM35-DSMBMM170

Design Features and Internal Construction

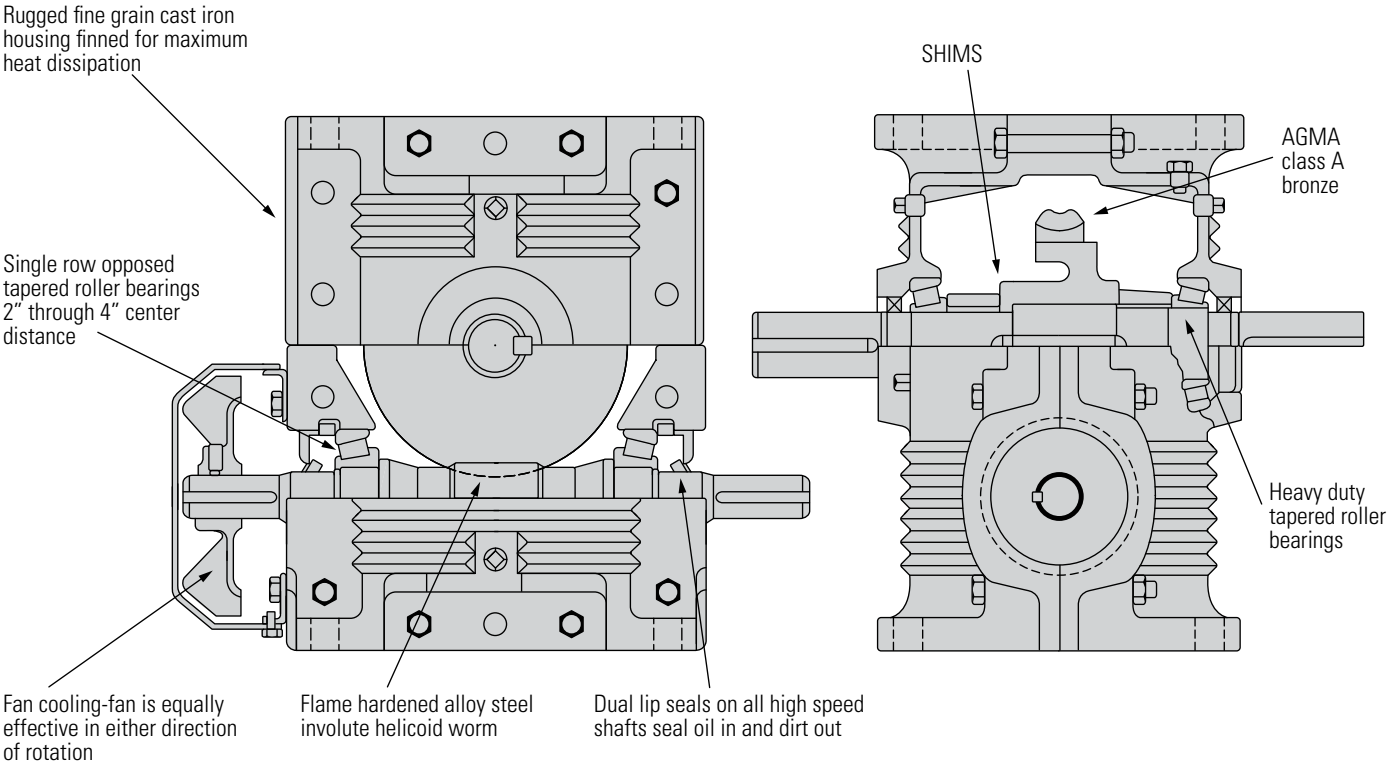

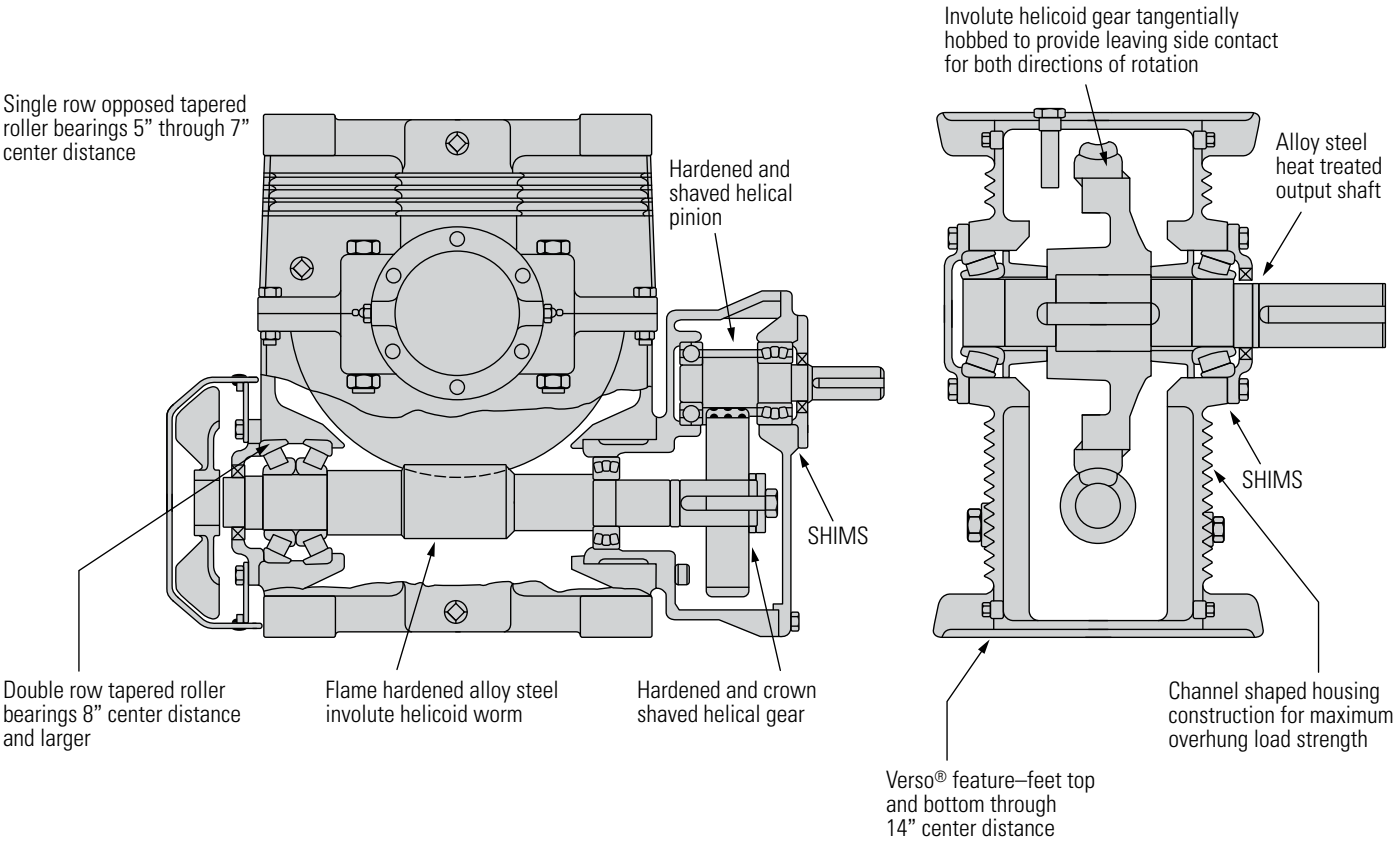

Design Features and Internal Construction

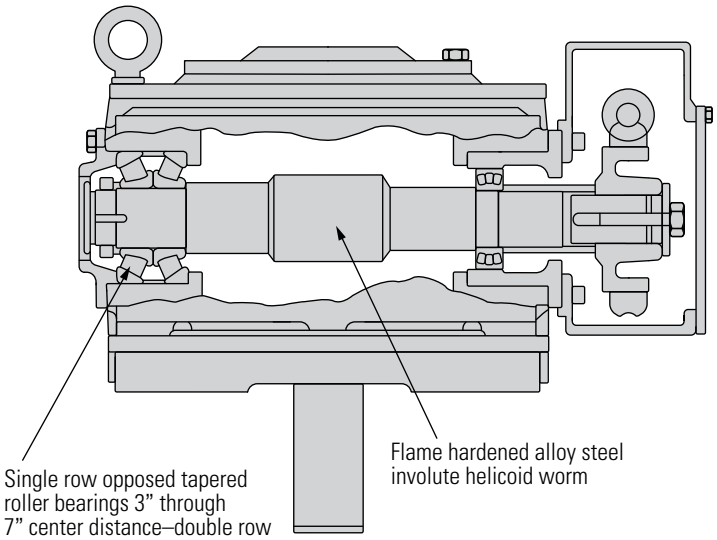

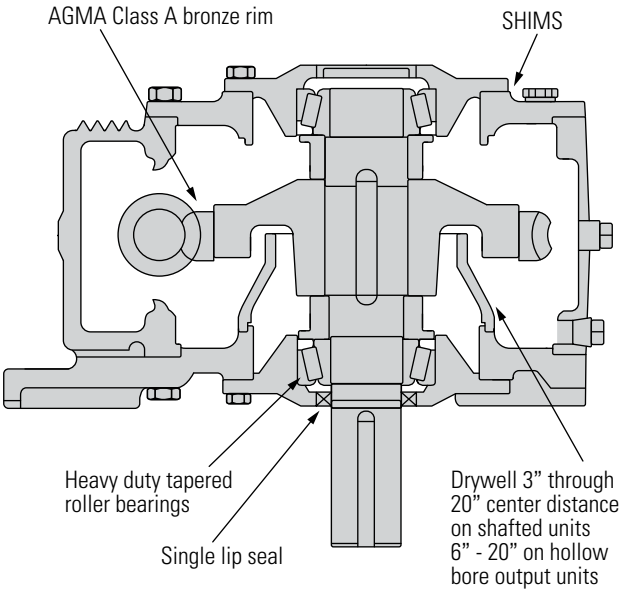

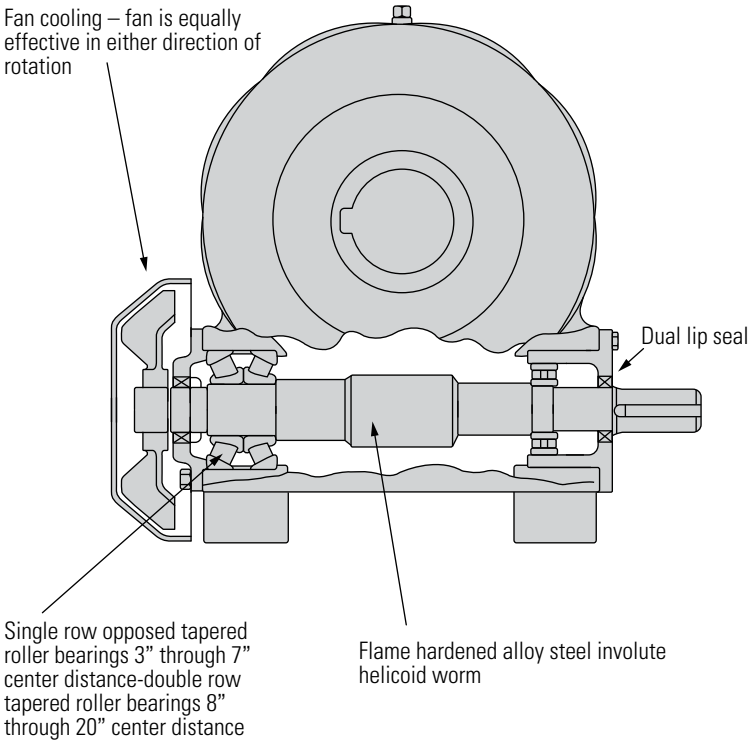

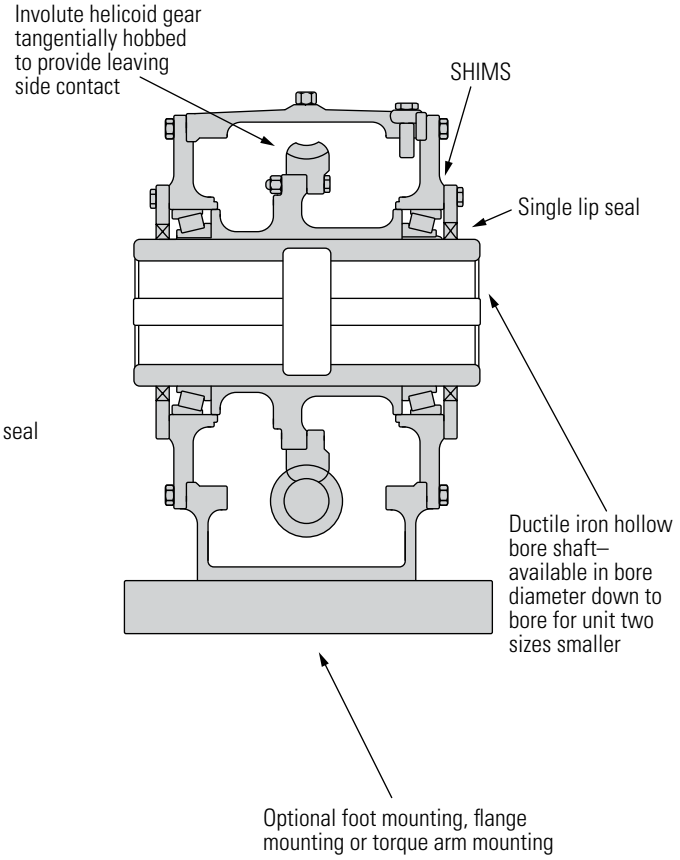

Typical Applications of Delroyd Speed Reducers

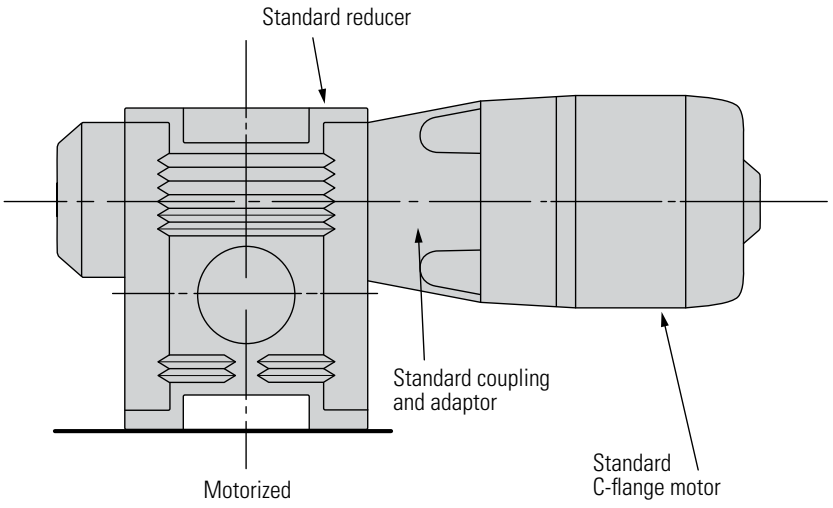

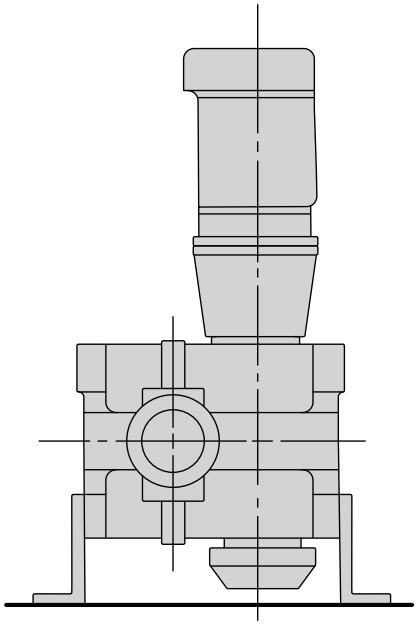

Bracket mounting worm vertical

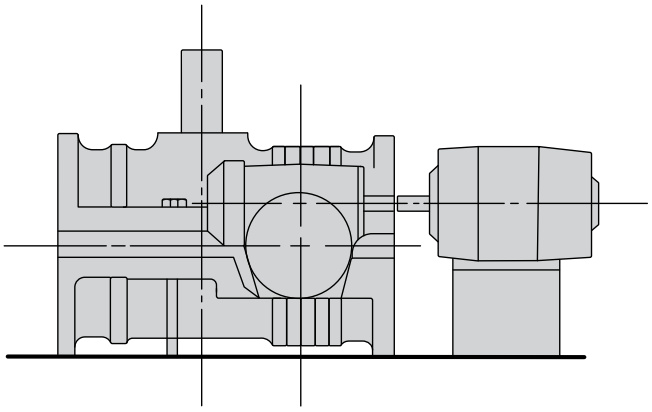

Direct coupled

Verso® Units

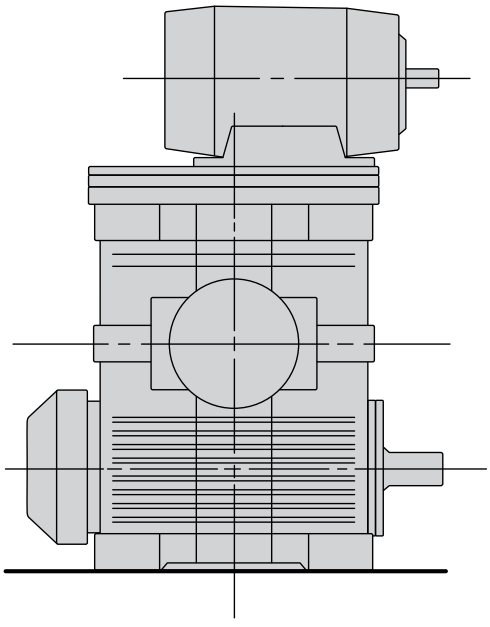

V-belt or timing belt

Vertical Units

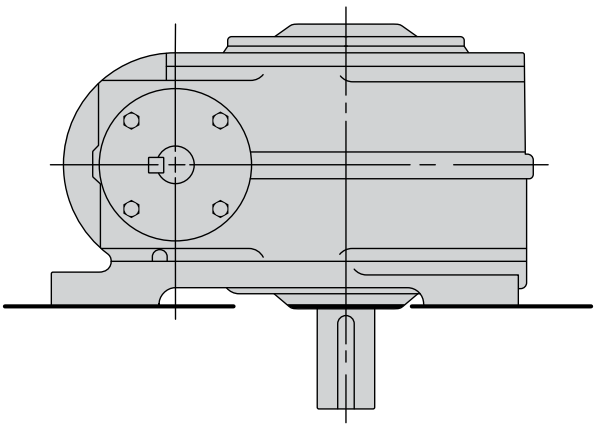

Vertical mounted reducer
Output shaft down

Typical Applications of Delroyd Speed Reducers

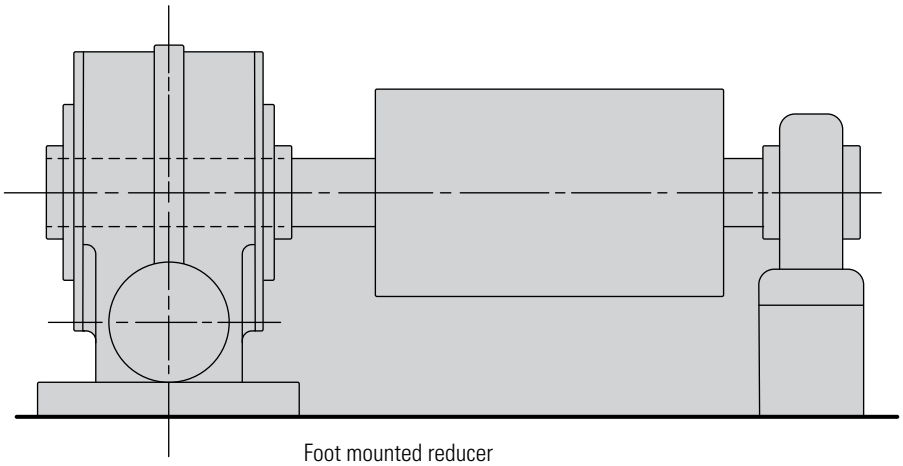

Foot mounted reducer
Conveyor head shaft support

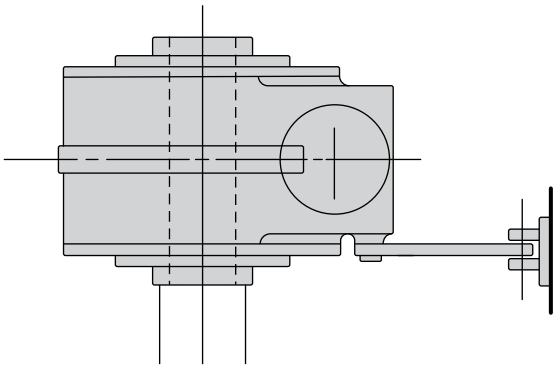

Torque arm mounted
Supported by vertical driven shaft

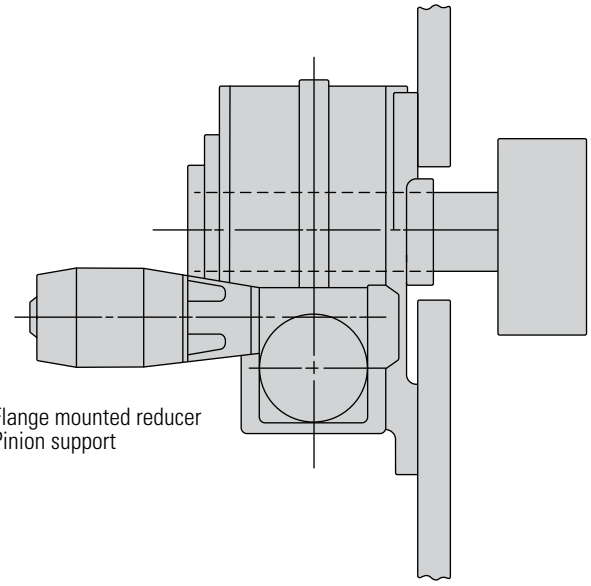

Flange mounted reducer
Pinion support

Shaft Mounted Units

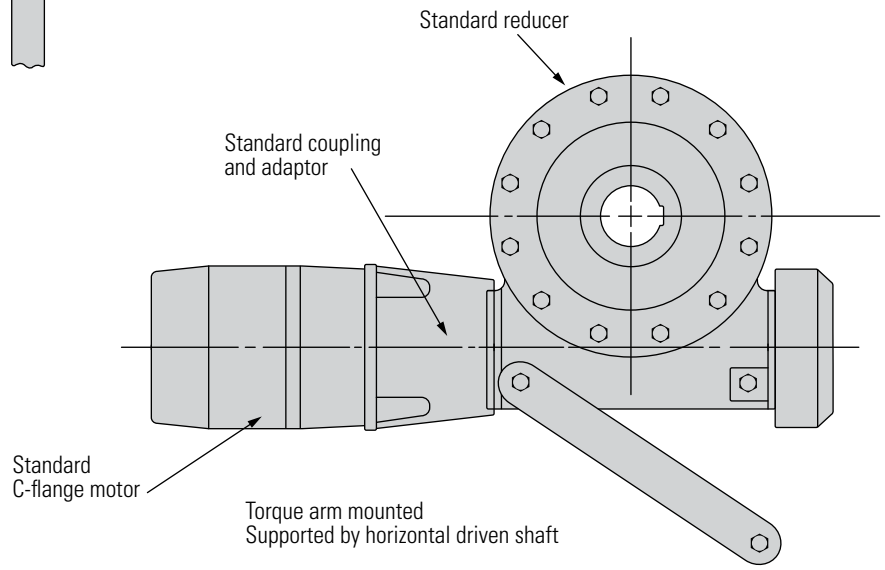

Standard Specifications

Backlash
The gearing contained in any reducer requires a certain amount of backlash for satisfactory operation. Clearance must be provided to accommodate an oil film and to allow for thermal expansion. The amount of backlash provided is not of particular importance in most applications, though closer limits than required will result in unnecessary higher costs and should be avoided. It is important, however, to recognize where minimum backlash may be required to insure proper equipment functioning. Close limits are most often specified for accuracy of index or timing. In other instances it may be advantageous to specify minimum backlash for the purpose of limiting the stress at the gear teeth caused by shock loading- such as a reversing impact load.

Listed in the table are standard single reduction limits measured by a "circular shake" movement at an output shaft radius equal to the gear pitch radius. The peripheral movement of the worm, with the gear shaft held fixed, would differ from values shown in the table. For this reason the actual value of total backlash between double reduction gear pairs is not determined by adding table tolerances for respective sizes. Consult the factory for double reduction unit backlash.

Center Distance	Backlash Limits
2.00"	.003/.013"
2.50"	.003/.013"
3.00"	.003/.013"
3.50"	.003/.013"
4.00"	.004/.014"
5.00"	.004/.014"
6.00"	.005/.015"
7.00"	.006/.018"
8.00"	.007/.020"
9.00"	.008/.021"
10.00"	.010/.023"
12.00"	.010/.026"
14.00"	.013/.031"
17.00"	.015/.036"
20.00"	.019/.043"

Lubrication
Oil contained in the housing reservoir is automatically directed by splash to the worm bearings and zone of tooth contact. (Gear bearings are grease lubricated at the factory and require only occasional attention.) Oil levels should be maintained properly. In accordance with best practice, a complete oil change is advisable after every six months of normal service.

Oil seals are fitted on all shaft extensions. "Drywells" are standard equipment on the larger units to assure positive sealing of vertical down shaft extensions. Filler plugs, drain holes, breathers and inspection openings are accessible for all mounting arrangements.

Lubricant types and oil capacities for each size and type reducer can be found in the Operation and Maintenance Manuals which are shipped with each unit or can be found at our web site. The oil level should be maintained at heights determined by the oil level sight gauge or plug in the reducer housing and checked only when the reducer is not operating.

Reversibility
All units are capable of running in either direction of worm rotation. Both faces have leaving side contact in relation to the corresponding direction of worm rotation. All Delroyd gears are hobbed to attain this ideal condition.

Self-Locking or Irreversibility
A self-locking worm gear is one which cannot be operated by applying power at the gear. Standard reducers incorporate gearing designed for most efficient power transmission and are not usually suited for self-locking service. A gear which is self-locking when stationary and subjected to only steady or light loads may start to creep in the presence of vibration and heavy loads. Owing to the rapid drop in the coefficient of friction with an increase in rubbing velocity, the efficiency of the drive rapidly increases with the RPM and the unit will quickly gather speed.

Means of approaching locking characteristics include use of higher, less efficient ratios (above 50:1) and designing for inefficiency (purposely using special design worms of large diameter and lead angles of 5 degrees or less). Such recourse cannot be depended upon in actual practice. The best way to obtain locking is to use a brake, released electrically when the motor is started. The best location for this brake is on the motor shaft or reducer input shaft. With worm gears of high ratios, the braking effect should be only a fraction of full load motor torque.

Overdriving
Ratios of 5: 1 through 15:1 can be used as speed increasers with approximately the same ratings as given in the catalog. Ratios above approximately 15:1 can tend to lock dynamically. Therefore, these ratios should be avoided in applications involving high inertia loads such as fan drives and wheel axle drives where the load tends to drive the gear when stopping. When ratios above 15:1 must be used in such applications, consult the factory.

Ratings and Service Factors
Reducers must be selected by considering both mechanical and thermal ratings. Tables in this book provide both mechanical ratings and thermal ratings in terms of input horsepower and inch-pounds output torque. Note that the fan cooled Delroyd design permits continuous service thermal ratings at a level equal to mechanical gearing capacities in most ranges.

Mechanical ratings reflect gearing wear capacity. Values in the rating tables apply for continuous service, free from recurrent shock loading, and of total duration up to ten hours per day. Normal starting or momentary peak loads up to 300% of this rating are permissible for a maximum period of two seconds duration. The total number of 300% peak loads is limited to 25,000 over the life of the reducer. Use of service factors is necessary dependent on actual nature and duration of service. The terms **"intermittent"** and **"occasional"** specified in the service factor table refer to total operating time per day while the term **"frequent starts and stops"** refers to more than ten starts per hour.

Thermal ratings above 100-200 RPM worm speed represent the input HP which will provide a stabilized 100°F oil temperature rise over ambient air temperature when operated continuously. For example, if the ambient air temperature is 70°F, a reducer carrying rated thermal HP will operate with an average oil temperature of 170°F. Since normal worm gear lubricants will deteriorate rapidly and require frequent replacement when operating continuously at 210-220°F, they may not properly support gear mesh loads. Thus the practical I maximum ambient air temperature for worm gear reducers carrying full thermal rating HP is 100°F.

Service Factors

		Driven Machine AGMA Load Classification		
Prime Mover	**Duration of Service**	**Uniform (Peak Load of 100% of Driver Hp.)**	**Moderate Shock (Peak Load of 125% of Driver Hp.)**	**Heavy Shock (Peak Load of 150% of Driver Hp.)**
Electric motor	occasional – ½ hr/day	0.80	0.90	1.00
	intermittent – 2 hr/day	0.90	1.00	1.25
	10 hr/day	1.00	1.25	1.50
	24 hr/day	1.25	1.50	1.75
Multicylinder internal combustion engine	occasional – ½ hr/day	0.90	1.00	1.25
	intermittent – 2 hr/day	1.00	1.25	1.50
	10 hr/day	1.25	1.50	1.75
	24 hr/day	1.50	1.75	2.00
Single cylinder internal combustion engine	occasional – ½ hr/day	1.00	1.25	1.50
	intermittent – 2 hr/day	1.25	1.50	1.75
	10 hr/day	1.50	1.75	2.00
	24 hr/day	1.75	2.00	2.25
For Frequent Starts and Stops				
Electric motor	occasional – ½ hr/day	0.90	1.00	1.25
	intermittent – 2 hr/day	1.00	1.25	1.50
	10 hr/day	1.25	1.50	1.75
	24 hr/day	1.50	1.75	2.00

Selection Procedure

Selections must be made on the basis of thermal ratings when they are less than the mechanical rating divided by the appropriate service factor. In making this comparison, do not apply service factors to thermal ratings since the nature of loading has a negligible effect on oil bath temperature rise. Thermal ratings can be completely ignored in occasional or intermittent service classification since the reducer can cool down between runs.

The total ratings of double reduction units are based on a 1.0 service factor. When operating conditions differ from those for proper application of a 1.0 service factor, the tabulated ratings for both helical-worm and double worm units must be divided by the appropriate service factors selected from the table on the opposite page.

Allowable Starting Load
If the peak starting load of the driven machine is within 300% of the normal operating load, and has a maximum starting period of two seconds duration, the reducer selection may be based on the catalog rating with a 1.0 service factor. When the starting load exceeds 300% of the listed rating, the reducer selection should be based on peak load divided by 3. If the starting load is 300% of the catalog rating and exceeds two seconds in length, a larger size reducer is required.

The procedure in the selection of a reducer should be as follows:	
Step 1.	Determine ratio required to provide desired output speed.
Step 2.	Determine service classification and corresponding service factor.
Step 3.	Refer to the horsepower rating table of the desired ratio. Select mechanical input and output rating which, when divided by the service factor, is equal to or greater than the required load.
Step 4.	In all applications except for intermittent service, check to see that the thermal horsepower or torque rating is greater than the mechanical rating divided by the service factor.
Step 5.	Check external loads applied to reducer.
	This procedure involves careful consideration of driven machine load classification for proper determination of service factor. See pages 13 and 14.

Standard Ratios
Ratios are listed in the rating tables. All are standard with right hand threads as manufactured in stock lots using existing tooling. They should be used whenever possible since special ratios require special tools and additional costs. Note that the hunting tooth principle is used to provide highest accuracy throughout the gearing life.

Horsepower and Torque
In transmitting power through a speed reducer, neglecting losses due to friction, the HP remains constant and the torque increases in the same ratio as the speed is reduced. To determine the horsepower required to drive a machine, it is sometimes necessary to ascertain the torque needed to operate the driven shaft at its desired speed. The conversion of output shaft torque and speed to input horsepower may be accomplished by using the following formula:

$$HP = \frac{P \times R \times RPM}{63{,}025 \times Eff} = \frac{T \times RPM}{63{,}025 \times Eff}$$

HP = Input HP

T = Output torque, in inch-pounds

R = Radius at which load force or weight is applied, in inches

RPM = Revolutions per minute of output shaft

P = Force or weight, in pounds

Eff = Efficiency, from table on page 15

Partial List of Typical Equipment Using Delroyd Reducers

Application	Load Nature		
	UNIFORM (Peak load of 100% of Driver Hp.)	MODERATE SHOCK (Peak load of 125% of Driver Hp.)	HEAVY SHOCK (Peak load of 150% of Driver Hp.)
Agitators	Pure and semi-liquids (with uniform density)	Liquids and solids Liquids (variable density)	
Blowers	Vane and centrifugal	Lobe	
Brewing	Bottling machines Brew kettles Can filling machines Cookers Mash tubs	Scale hoppers - frequent starts	
Car dumpers			Heavy
Car pullers		Moderate	
Clarifiers	Uniform		
Clay working machinery		General and pug mills	Brick presses Briquette machines
Compressors	Centrifugal Rotary	Lobe Reciprocating (multi-cylinder)	Reciprocating (single-cylinder)
Conveyors (uniformly loaded or fed)	Apron Assembly Belt Bucket Flight Floor Oven Screw Trolley		
Conveyors (not uniformly loaded or fed and non-uniform material)		Apron Assembly Belt Bucket Chain Flight Oven Screw	Reciprocating Shaker
Cranes and Hoists	Auxiliary hoists Luffing booms Main hoists	Medium duty: reversing, skip, travel or trolley motion	Heavy duty: reversing, skip, travel or trolley motion
Crushers			Ore or stone
Elevators	Bucket (uniform and continuous) Centrifugal discharge Escalators Gravity discharge	Bucket (heavy load) Freight	Refer passenger elevators to factory
Fans	Centrifugal (uniform speed & balance) Light, small diameter propeller type	Induced draft Large mine	Refer cooling towers to factory
Feeders	Disc	Apron Belt Screw	Reciprocating
Food	Bottling machines Can filling machines Cereal cookers	Beet slicers Dough mixers Meat grinders	
Hoists (see cranes)			
Line shafts	Group drives (light duty) Other line shafts	Driving process equipment	
Lumbering and sawmills	Small waste conveyor belts	Burner conveyors Edger feeds Gang feeds Green chains Off bearing rolls Plane feed & floor chains Planer tilting hoists Re-saw conveyors Small waste conveyor chains Sorting tables Tipple hoist conveyors Tipple hoist drives Transfer and waste conveyors Transfer rolls Tray drives Trimmer reeds	Chain transfers Craneway transfers Live rolls Log decks Log hauls-incline and well type Log turning devices Main log conveyors Roll cases Slab conveyors
Machine tools	Auxiliary drives (feed, traverse)	Bending rolls Main drives	Plate planers Punch presses Tapping machines

Load classes identified above are for guidance. Choice of applicable service factor should be based on consideration of the actual load nature and duty cycle anticipated. Applications involving more than ten starts and stops per hour or where high energy loads must be absorbed are not covered.
Maximum momentary starting load must not exceed 300% of speed reducer rating with service factor of 1.0.

Load Class Tables

Partial List of Typical Equipment Using Delroyd Reducers

Application	Load Nature		
	UNIFORM (Peak load of 100% of Driver Hp.)	MODERATE SHOCK (Peak load of 125% of Driver Hp.)	HEAVY SHOCK (Peak load of 150% of Driver Hp.)
Marine machinery	Turning gear	Dredges - cable reel, conveyor cutter head, jig, pump, screen stackers Utility winches	Main winches Pulleys, barge head Windlasses and capstans
Metal mills		Draw bench carriage and main drives Slab pushers Slitters Small rolling mill drives Table conveyors (non-reversing) Wire drawing and flattening machines Wire winding machines	Forming machines Manipulators Punch presses Table conveyors – individual drive Table conveyors – reversing
Mills-rotary type		Ball Cement kilns Dryers and coolers Kilns (other than cement) Pebble Pug Rod-plain and wedge bar	Hammer Tumbling barrels
Mixers	Constant density	Variable density Concrete mixers	
Oil production and refining		Chillers Paraffin filter presses Rotary kilns	Refer well pumping units to factory
Paper mill drives	Bleacher Conveyors (uniformly loaded) Presses Suction roll Winders	Agitators or mixers Beaters and pulpers Calenders Converting machines, except cutters, platers Couch rolls Cylinders Dryers Felt stretchers Pulp machine reels Stock chests Washers and thickeners	Cutters- platers Felt whippers Jordans Log hauls Super calenders
Pumps	Centrifugal, Rotary, gear, screw, lobe, vane	Proportioning Reciprocating- single acting (3 or more cylinders) or double acting (2 or more cylinders)	Reciprocating-single acting (1 or 2 cylinders) or double acting (single cylinder)
Rubber and plastics industry	Rubber mills – three on line	Calenders Extruders Laboratory equipment Refiners Rubber mills-two on line Sheeters Tubers and strainers Warming mills	Mixing mills Refer tire building machines, tire and tube openers to factory
Sand mullers		Moderate	
Screens	Air washing Traveling water intake	Rotary (stone or gravel)	
Sewage disposal equipment	Bar screens Chemical feeders Collectors (sludge, grit)	Dewatering screens Scum breakers Slow or rapid mixers Thickeners Vacuum filters	
Stokers	Uniform		
Textile machinery		Batchers Calenders Cards Dry cans Dryers Dye boxes Jigs Looms Nappers and gigs Pads Slashers Soapers Spinning frames Tenter frames Washers Winders	Refer knitting machines and range drives to factory

Load classes identified above are for guidance. Choice of applicable service factor should be based on consideration of the actual load nature and duty cycle anticipated. Applications involving more than ten starts and stops per hour or where high energy loads must be absorbed are not covered.
Maximum momentary starting load must not exceed 300% of speed reducer rating with service factor of 1.0.

Efficiency

The approximate percentage efficiency of a single reduction set of gearing in a Delroyd unit for any speed may be taken from the table below. Double worm reductions have an overall efficiency equal to the product of the separate reduction values at their actual operating speeds. Helical attachments, any ratio, run approximately 97% efficient.

When using the table of efficiencies, some allowance should be made for reducer mechanical losses such as bearing friction and oil churning. Values listed are sufficiently accurate for most calculation purposes. First select the center distance and then read horizontally from the worm speed to the proper ratio column. Efficiencies for intermediate speeds and ratios may be obtained by interpolation.

$$VS = \frac{.262\ (WPD)\ RPM}{COS\ (LA)}$$

$$Efficiency = \frac{TAN\ (LA)}{TAN\ (LA + \emptyset)}$$

VS = Rubbing speed - feet per minute
WPD = Worm Pitch Diameter - inches
RPM = Worm RPM
LA = Lead angle of worm - degrees
Ø = Friction angle - degrees (see chart)

Friction Angle Ø

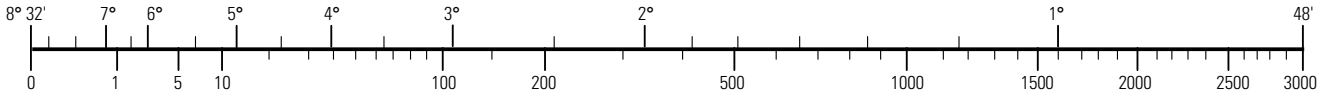

V_S - Rubbing Speed (Feet per Minute)

	RPM of Worm	Nominal Ratio										
		5	7.5	10	15	20	25	30	40	50	60	70
	1750	96	95.5	94.5	92.5	90.5	90	87.5	85	81.5	78.5	74.5
	1450	95.5	95	94	92	90	89	86.5	83.5	80	76.5	72.5
2"-7"	1150	95	94.5	93.5	91	89	89	85.5	82	78	74.5	70.5
C.D.	865	94.5	94	93	90.5	88.5	87	84.5	81	77	73	69
	680	94	93.5	92	90	87.5	86	83	79.5	75.5	71.5	67.5
	575	93	92	90.5	88	85.5	84	80.5	77	72.5	69	65
	300	92	90	88	84.5	81.5	80	76	72	67	64	60
	50	86	85	84	80	75	73	71	63	58	55	49
	0	76	76	74	70	63	60	58	49	44	42	36
	1750	97.5	97	96.5	95	93	92.5	91.5	88.5	85.5	84	81 .5
	1450	97	96.5	96	94.5	92.5	92	91	87.5	85	83	80
8"-10"	1150	96.5	96	95.5	94	92	91.5	90	86	83.5	81.5	78.5
C.D.	865	96	95.5	95	93.5	91.5	90.5	89	85	82	80	77
	680	95.5	95	94.5	92.5	90.5	89.5	88	83.5	80	78	75
	575	94.5	94	93.5	91	88.5	87	85.5	81	77	75	71.5
	300	93.5	92	91	88.5	84.5	83	81.5	76	72	69.5	66
	50	87	86	85	82	76	74	72	65	60	57	51
	0	76	76	74	70	63	60	58	49	44	42	36
	1750	98	97.5	97	96	95	93.5	93	91	88.5	86.5	85
	1450	97.5	97	96.5	95.5	94.5	93.5	92.5	90.5	88	86	84.5
12"-20"	1150	97.5	97	96.5	95	94	93	92	89.5	87	85	83
C.D.	865	97	96.5	96	95	93.5	92.5	91.5	89	86	84	81.5
	680	96.5	96.5	95.5	94.5	93	92	91	88	84.5	82	79
	575	96	95.5	95	93.5	91.5	90	88.5	85.5	81	78.5	75
	300	94.5	93.5	92.5	90.5	88	86	84	80.5	76	72.5	68
	50	90	89	88	85	82	80	77	72	68	63	57
	0	73	72	71	69	65	61	57	52	47	42	35

Axial Thrust Capacity

Axial Thrust Capacity - Low Speed Shaft- Pounds

	Low Speed Shaft RPM				
Unit Size	350	300	250	200	150
20	170	200	220	240	260
25	300	310	320	330	360
30	380	400	420	450	480
35	650	730	800	850	940
40	700	750	850	970	1100
50	1000	1150	1200	1250	1360
60	1300	1375	1425	1500	1650
70	1500	1900	2200	2500	2800
80	3100	3700	4200	4700	5300
90	3200	3800	4300	4800	5400
100	3300	3900	4400	4900	5600
120	5000	6000	7000	7800	8800
140	6000	6500	6600	6750	6950
170	12000	13200	14400	15700	17200
200	17200	18300	18900	19700	20600

	Low Speed Shaft RPM				
Unit Size	100	75	50	25	10-0
20	320	380	480	740	900
25	450	550	730	1100	1200
30	550	610	730	1100	1370
35	1000	1050	1170	1620	2200
40	1220	1300	1400	1800	2300
50	1500	1550	1800	2500	3500
60	1800	1820	2150	3150	4500
70	3100	3250	3600	4800	6500
80	5800	6100	6700	8200	9650
90	6000	6200	6800	8300	9900
100	6100	6400	7000	8400	10100
120	9700	10200	11500	14500	16500
140	7250	7550	7950	8650	10120
170	18900	19900	21000	24500	25000
200	21800	22800	24100	27600	30000

Axial thrust capacity is calculated assuming no overhung load is applied. When both thrust and overhung loads are applied, consult the factory.

Overhung Load Capacity

Overhung load capacities for both input and output shafts are listed on these and following pages. Tabulated figures provide the maximum radial load which may be applied to the shafts. The determination of these figures is based on the load being applied at the midpoint of standard shaft extensions. A method is also included to provide the percentage reduction in output shaft overhung load capacity when force must be applied beyond midpoint of standard shaft extension. This load is usually in the form of a pull due to a chain on a sprocket, a belt on a pulley, the tooth pressure between a pinion and gear, or a weight such as might be carried by a hoisting drum.

In order to calculate the applied overhung load, first determine the torque at the shaft on which this load is applied. This may be accomplished by means of the formula given in the section on Horsepower and Torque on page 12.

In solving for torque, this formula is used in the following form:

$$T = \frac{HP \times 63{,}025}{RPM}$$

The tangential force on the overhung member may then be found by dividing the torque (T) by the pitch radius (R) of the overhung member. For a chain reduction the tangential force calculated in this manner is the actual overhung load. When the overhung member is a pinion or belt pulley, the actual overhung load is greater than the tangential force due to the separating force between gears or the initial tension required in the belts. The approximate overhung load may be determined by multiplying the tangential force by a suitable factor taken from the following tabulation:

Spur pinion 1.25
V-belt pulley 1.5 Flat belt pulley 2.5

Worm Shaft Overhung Load Capacity* Pounds

	Worm Shaft RPM								
Unit Size	1750	1450	1150	870	680	580	450	300	100
20	100	110	120	130	135	140	145	150	160
25	150	160	170	180	185	190	195	200	210
30	200	210	220	240	260	275	290	310	330
35	230	250	275	300	340	360	390	425	470
40	270	310	350	400	450	480	520	570	650
50	340	395	450	540	620	680	740	830	950
60	500	520	600	710	800	850	930	1040	1210
70	550	575	650	770	850	920	1000	1100	1260
80	590	625	710	820	910	980	1050	1150	1300
90	680	725	790	890	1000	1040	1125	1250	1420
100	780	825	900	1000	1100	1160	1275	1400	1600
120	900	950	1000	1050	1150	1180	1400	1525	1740
140	1140	1200	1400	1600	1750	1800	1950	2100	2300
170	1380	1500	1700	1900	2100	2200	2300	2500	2800
200	1600	1750	2000	2400	2600	2750	2900	3100	3500

Helical Pinion Overhung Load Capacity* Pounds

	Helical Pinion RPM				
Unit Size	1750	1450	1150	870	580
35	55	54	45	43	40
40	110	100	90	85	80
50	140	135	130	125	120
60	210	205	200	190	180
70	275	240	250	225	200
80	400	375	350	300	250
90	650	625	600	550	475
100	800	750	700	675	500
120	900	850	800	750	700
140	1200	1150	1100	950	1000
170	1700	1650	1600	1550	1500
200	2500	2450	2400	2300	2200

*Worm shaft and helical pinion shaft overhung load capacities are calculated based on loads applied at midpoint of standard shaft extensions.

Overhung Load Capacity

Overhung Load Capacity- Low Speed Shaft- Pounds at Mid-point of Shaft Extension (Dimension "MS")

The overhung load capacities given below can vary based on the type of reducer being considered. For purposes of this catalog entry, the worst case (direction of application) for the overhung load was assumed for each of the different types of reducers (horizontal, vertical, and shaft mounted).

Overhung load capacity was calculated taking into consideration the bearing capacity, shaft stress, housing strength, and foot bolt stress. Since the minimum value of overhung load capacity is listed below, it is recommended that these figures be used as a guide only. Consult the factory when greater overhung load capacities are desired. We will quickly calculate the exact capacity for your application using our existing computerized formulas.

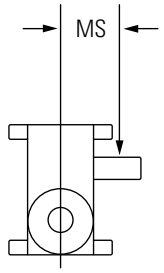

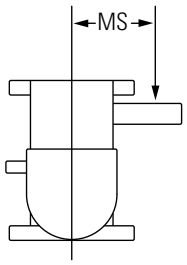

Unit Size	Point of Application Dimension MS	Low Speed Shaft RPM				
		350	300	250	200	150
20	3	400	410	420	430	450
25	4 ¼	540	545	550	560	580
30	4 ¾	780	800	830	900	1000
35	5 ⅝	1510	1550	1600	1720	1930
40	6 ¾	1565	1600	1670	1800	2000
50	7 ⅝	2070	2100	2200	2350	2600
60	8 ½	2400	2410	2500	2650	2950
70	9	3800	3900	4050	4300	4800
80	9 ⅜	4800	5000	5400	5800	6400
90	11	5600	5900	6300	6800	7600
100	12 ⅜	5600	5900	6300	6800	7700
120	13 ¼	7100	7400	7700	8200	9200
140	14 ¾	8200	8300	8500	8900	9500
170	16 ½	14700	15200	15800	16600	17600
200	18 ¼	15000	15500	16200	17100	18000

Overhung load capacity is calculated assuming no thrust load is applied. When both overhung load and thrust loads are applied, consult the factory.

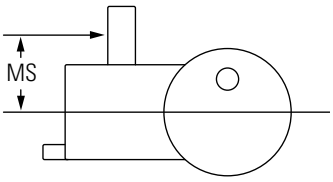

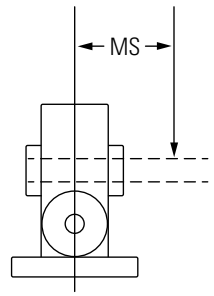

Load applied in any direction

Unit Size	Point of Application Dimension MS	Low Speed Shaft RPM				
		100	75	50	25	10 – 0
20	3	500	600	700	900	900
25	4 ¼	720	840	1000	1220	1500
30	4 ¾	1170	1300	1470	1720	2100
35	5 ⅝	2270	2500	2850	3070	3070
40	6 ¾	2300	2570	2950	3300	3300
50	7 ⅝	3000	3320	3750	4400	4830
60	8 ½	3470	3800	4300	4900	6880
70	9	5500	6100	6800	7800	8970
80	9 ⅜	7400	8000	8800	9700	11700
90	11	8800	9600	10700	12000	14500
100	12 ⅜	9000	9900	11000	12500	16300
120	13 ¼	10500	11500	12700	14400	20000
140	14 ¾	10500	11500	12900	14500	22000
170	16 ½	19100	20200	22000	25500	27000
200	18 ¼	19300	20600	22300	25700	28000

Overhung load capacity is calculated assuming no thrust load is applied. When both overhung load and thrust loads are applied, consult the factory.

Overhung Load Capacity – Low Speed Shaft –
Pounds at Distances Greater than Mid-point of Shaft Extension (Dimension "X")

Maximum overhung load capacity at " X" dimension is the smaller of the following:

$$OHL_{at\ x} = (OHL_{at\ MS} \text{ @ operating RPM}) \left(\frac{MS\cdot + A}{X + A}\right)$$

$$OHL_{at\ x} = (OHL_{at\ MS} \text{ @ 10 RPM}) \left(\frac{B}{X - C}\right)$$

Where $OHL_{at\ x}$ = overhung load at X

$OHL_{at\ MS}$ = overhung load at MS given in table on page 18

A, B, and C = factors given in this table

Unit Size	A	B	C
20	1 1/4	1 7/16	1 9/16
25	2 1/8	1 3/4	2 1/2
30	2 3/8	1 7/8	2 7/8
35	2 3/4	2 5/16	3 5/16
40	3 5/8	2 5/8	4 1/8
50	4 1/8	2 7/8	4 3/4
60	4 5/8	3 1/8	5 3/8
70	4 3/4	3 9/16	5 7/16
80	4 7/8	3 11/16	5 11/16
90	5 5/8	4 1/2	6 1/2
100	6 3/8	5 1/16	7 5/16
120	6 7/8	5 3/8	7 7/8
140	8	5 7/8	8 7/8
170	8 1/2	6 1/2	10
200	9 7/8	7 1/16	11 13/16

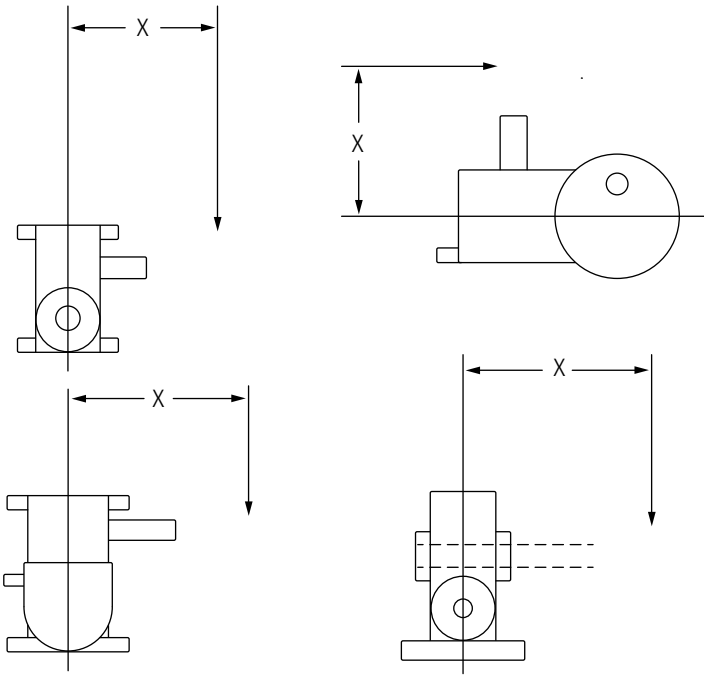

Load applied in any direction

Examples of Worm Gear Selection

Example I
A vertical worm gear reducer is to be selected to drive a pure liquid agitator by means of a direct coupled arrangement.

Conditions:

1. Motor: 10 HP, 1750 RPM.
2. Agitator Speed- 58 RPM.
3. Axial thrust load due to weight of agitator and hydraulic thrust: 1650 pounds.
4. Service: 10 hours per day, no shock load.

Solution:

1. Approximate ratio required is

$$\frac{1750}{58} = 30.2$$

2. 10 hour duty, pure liquid agitator service, electric motor drive (Refer to pages 12, 13 and 14.) Service factor = 1.0.
3. By reference to page 27, it is found that a 6" center distance reducer with a 30:1 ratio at 1750 RPM worm speed has a mechanical input horsepower rating of 10.2.
4. Since the mechanical rating divided by the appropriate service factor (1.0) is less than or equal to the thermal rating (10.2 HP), there will be no thermal problem.
5. Having established that a 30:1 ratio reducer of 6" center distance is of suitable size to transmit the load horsepower, the axial thrust capacity should next be checked by reference to the table on page 16. For output shaft speeds under 75 RPM, the 6" center distance unit has a thrust capacity of 1820 pounds. This is more than adequate.

Example II
A horizontal worm gear reducer is to drive a medium duty hoisting drum. A chain reduction will be provided between the reducer shaft and the drum shaft.

Conditions:

1. Motor: 575 RPM, horsepower to be determined.
2. Drum: radius from center of drum to centerline of rope is 8"; rope pull: 1700 pounds; drum speed 10 RPM.
3. Chain reduction: ratio 3:1, pitch diameter of sprocket mounted on reducer output shaft 5".
4. Service: intermittent, moderate shock, 5 or 6 cycles of operation per day with no more than one minute of operation during a one hour period.

Solution:

1. The output speed of the reducer is obtained by multiplying the drum speed by the ratio of chain reduction

$$3 \times 10 = 30 \text{ RPM}$$

The approximate ratio required is

$$\frac{575}{30} = 19.2 \text{ or } 20{:}1$$

2. The torque at the drum is the product of the rope pull and the radius from the center of the drum to the rope centerline: $1700 \times 8 = 13{,}600$ inch-pounds. This figure divided by the ratio of chain reduction provides the torque at the reducer output shaft

$$\frac{13{,}600}{3} = 4530 \text{ in-lbs}$$

3. The horsepower input to the reducer is found from the formula on page 12

Input HP =

$$\frac{T \times RPM}{63{,}025 \times Eff} = \frac{4530 \times 30}{63{,}025 \times .855} = 2.52$$

A 3 HP motor should therefore be used to supply the necessary power.

4. Determine proper service factor: 1.0 for occasional, moderate shock, total operating time not exceeding ½ hour per day, electric motor driven, from table on page 11.
5. Reference to rating tables for the desired 20:1 ratio shows that a 4.0" reducer operating at 575 RPM input has a mechanical rating of 3.11 HP. The reducer rating for this service is determined by dividing by the service factor

$$\frac{3.11}{1.0} = 3.11$$

This rating exceeds the required load to be transmitted, meaning the 3112" unit is proper. A thermal rating limitation will not be necessary due to the intermittent nature of the load.

6. The chain pull (overhung load) is determined by dividing the torque at the reducer output shaft by the pitch radius of the sprocket

$$\frac{4530}{2.5} = 1810 \text{ pounds}$$

Reference to page 18 shows the overhung load capacity of the 3½" unit low speed shaft to be 2850 pounds at speeds under 50 RPM.

Example III
A right angle, horizontal output reduction unit is to be selected to drive a belt conveyor, not uniformly fed.

1. Operation: one eight hour continuous shift per day.
2. Load torque at conveyor headshaft: 32,000 inch-pounds.
3. Electric motor speed: 1750 RPM, HP to be determined.
4. Conveyor drum to turn 30 RPM.
5. Momentary starting load not exceeding 250% of transmitted power.

Solution:

1. Approximate ratio required

$$\frac{1750}{30} = 58.3$$

2. Determine proper service factor: load class table, page 11, indicates moderate shock, 8 hours per day service factor = 1.25 (pages 13 & 14).
3. Selection can be made using output torque ratings from the tables. Page 44 shows that a 9" center distance, ratio 59.25 helicalworm unit has a mechanical output torque rating of 45,200 inch-pounds torque at 1750 RPM input with a 1.0 service factor. The equivalent rating with a 1.25 service factor is

$$\frac{45{,}200}{1.25} = 36{,}200 \text{ inch-pounds}$$

4. The HE-90 selection is good since:
   a. Equivalent rating with 1.25 service factor (36,200 inch-pounds), exceeds load torque (32,000 inch-pounds).
   b. Equivalent mechanical rating is less than thermal rating.

$$45{,}200 \ \frac{21.4}{24.4} = 39{,}800 \text{ inch-pounds}$$

   c. Starting torque rating of HE-90 (3 x 45,200) exceeds conveyor peak starting load (2½ x 32,000).

5. The helical gear efficiency times second reduction worm efficiency .97 x .903- from page 15 = 87% overall. The motor horsepower necessary to deliver 32,000 inchpounds torque at the conveyor shaft is

Input HP =

$$\frac{T \times RPM}{63{,}025 \times Eff} = \frac{32{,}000 \times 30}{63{,}025 \times .87} = 17.5$$

As a check, efficiency can be determined calculating from input and output values listed in rating tables. The mechanical input HP rating of this selection is 24.4, the mechanical output torque 45,200 inch pounds.

Therefore

$$Eff = \frac{\text{Output RPM} \times \text{Output Torque Rating}}{\text{Input HP Rating} \times 63{,}025}$$

$$= \frac{29.5 \times 45{,}200}{24.4 \times 63{,}025} = 87\%$$

Use a 20 HP motor with proper starting characteristics.

Important Notes

Dimensions and Weights

This catalog contains outline drawings for all Delroyd types. Major overall and mounting hole dimensions, plus shaft elevations, lengths and diameters are shown. Net weights in pounds of the reducers are included in the same tables. Outline drawings illustrating reducers combined with baseplates are available from your Delroyd salesman.

How to Order

See page 2 for a quotation sheet. In ordering, specific reducer designations from this catalog should be used to avoid questions as to what is actually required. This description should include type, center distance, ratio, shaft assembly, and bore size (shaft mounted units only). Driving motor HP, operating worm speed, and output torque together with a short description of the nature of the load and duration of operation is desirable if available.

Shaft arrangements are shown in chart form on the dimension pages for each type. Carefully relate these charts to the input and output shaft construction needed for proper use with the driving and driven machines. Where motor adaptor and couplings are required, specify standard NEMA “C” face frame size to be used. If Delroyd is supplying the motor, include motor HP, speed, enclosure, voltage, phase, cycles and starting characteristics required.

Worm-above-gear arrangements (shaft assemblies T-1, etc.) require special design attention when operating under worm speeds of approximately 500 RPM. To insure adequate lubrication of worm bearings, please make special note of worm speeds under 500 RPM on order. Necessary lubrication modifications will then be provided at no increase in price.

Requirements for special worm lengths, special mounting positions, special low speed shafts, and special shaft mounted bores should be accompanied by sketches where possible. Shaft mounted units can be supplied with special bores from bore shown down to bore for unit two sizes smaller. Special modifications should be avoided whenever possible since additional charges must be made.

Selections Beyond Range of This Catalog

Worm gear units and sets can be supplied to meet any requirement. Delroyd literature is available featuring selection and dimensional data on worm gearing to fit rating categories above and below those listed in this catalog. Specifications on machining limits, interchangeability of parts, materials, heat treatments, anti-friction bearings, self-contained lubrication systems, and increased ratings apply through the entire line.

Inquiries for these or any other reducers should specify type, rating, and speed of the driving machine; the load nature, duty cycle, speed, actual and starting horsepower of the particular kind of driven machine; plus space, mounting, position or other special requirements to be met by the reducer.

Delroyd Single Reduction Speed Reducers

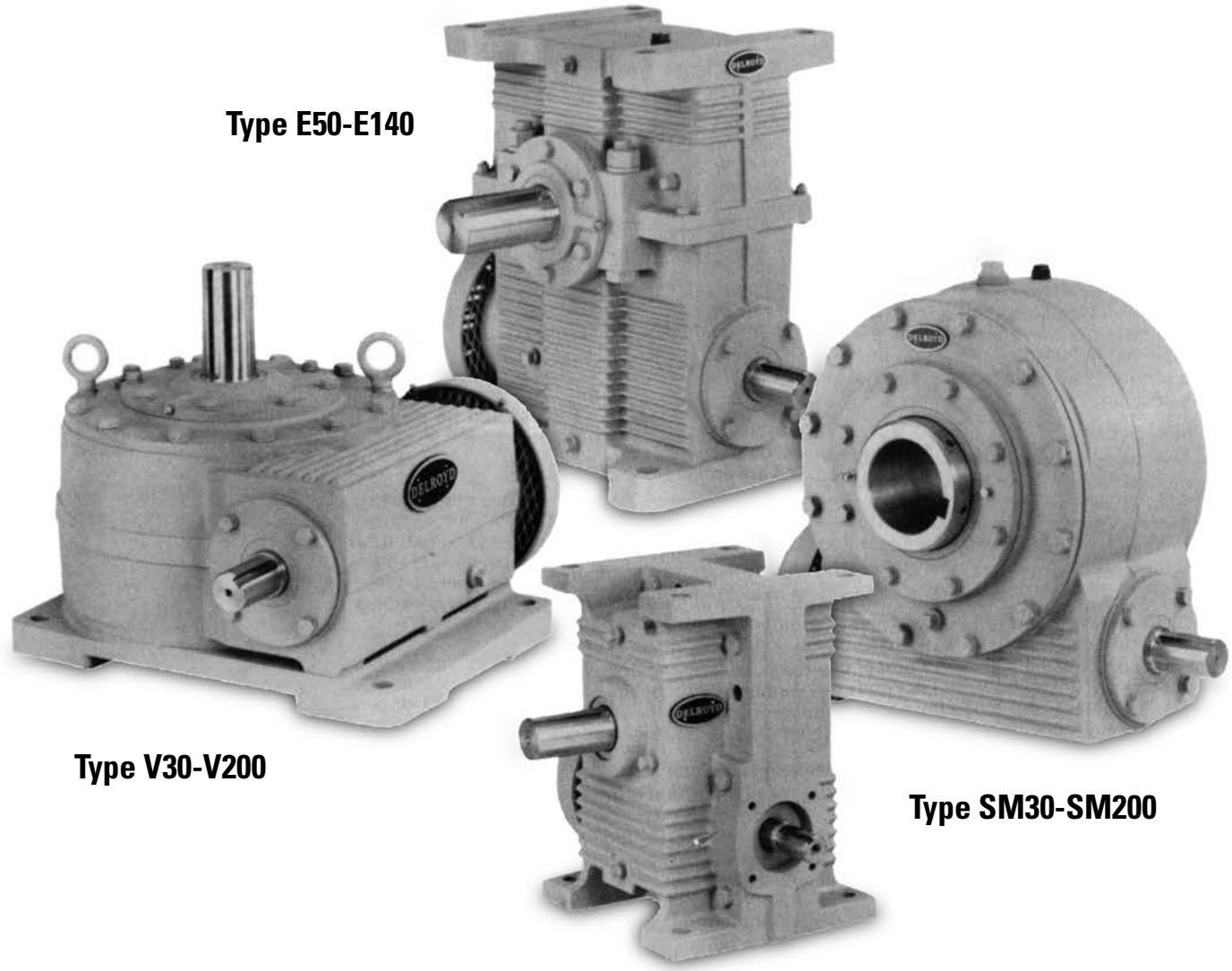

Type E50-E140

Type V30-V200

Type SM30-SM200

Type E20-E40

Horsepower and Torque Ratings • Single Reduction

Nominal Ratio 5:1

WORM SPEED (RPM)	Unit Size	20	25	30	35	40	50	60	70	80	90	100	120	140	170	200
	Center Distance	2	2.5	3	3.5	4	5	6	7	8	9	10	12	14	17	20
	Total Ratio	5.17	5.17	5.17	5.17	5.17	5.17	5.13	5.13	5.13	5.13	5.13	5.11	5.10	5.10	5.10
	Actual Ratio	5-1/6	5-1/6	5-1/6	5-1/6	5-1/6	5-1/6	5-1/8	5-1/8	5-1/8	5-1/8	5-1/8	5-1/9	5-1/10	5-1/10	5-1/10
1750	Mech. Input HP	2.77	4.14	7.62	10 8	14.8	23.8	34.8	52.5	71.3	92.5	119	176	265	430	625
	Out.Torq., in.lbs.	465	709	1320	1880	2580	4180	6090	9210	12500	16200	21000	31200	46700	76000	111000
	Therm. Input HP	2.77	4.14	7.03	10.0	13.5	23 8	34.8	50.0	67.0	85.0	110	150	184	225	290
	Output RPM	339	339	339	339	339	339	341	341	341	341	341	342	343	343	343
	Efficiency %	90.2	92.0	93.1	93.6	93.7	94.4	94.8	95.0	95.0	94.9	95.6	96.3	95 9	96.2	96.7
1450	Mech. Input HP	2.48	3.79	7.06	10.0	13.5	21.8	31.7	48.2	65.7	85.4	107	164	242	390	580
	Out.Torq., in.lbs.	503	781	1470	2090	2830	4620	6690	10200	13900	18200	23700	35000	51500	83000	124000
	Therm. Input HP	2.48	3.79	6.25	8.78	12.0	21.8	31.7	47.0	59.3	75.0	98.0	133	165	203	262
	Output RPM	281	281	281	281	281	281	283	283	283	283	283	284	284	284	284
	Efficiency %	90.3	91.8	92.7	93.1	93.3	94.4	94.7	95.0	95.0	95.7	99.4	96.1	96.0	96.0	96.4
1150	Mech. Input HP	2.20	3.37	6.33	9.12	12.3	19.5	28.3	43.2	59.2	77.5	101	149	213	345	520
	Out.Torq., in.lbs.	560	872	1660	2400	3240	5170	7490	11500	15800	20700	27200	39900	57100	89200	141000
	Therm. Input HP	2.20	3.37	5.38	7.52	10.3	19.0	28.3	42.0	51.1	64.5	86.9	115	140	173	225
	Output RPM	223	223	223	223	223	223	224	224	224	224	224	225	225	225	225
	Efficiency %	89.9	91.4	92.6	92.9	93.0	93.6	94.2	94.8	95.0	95.1	95.9	95.6	95 9	92.5	97.0
865	Mech. Input HP	1.82	2.81	5.39	8.10	10.9	17.4	25.2	37.4	51.3	67.0	87.4	132	185	300	445
	Out.Torq., in.lbs.	610	962	1870	2820	3800	6120	8810	13200	18100	23800	31000	47000	65800	107000	159000
	Therm. Input HP	1.82	2.81	4.40	6.21	8.45	15.6	23.6	33.2	41.8	52.6	70.9	93.5	112	140	182
	Output RPM	167	167	167	167	167	167	169	169	169	169	169	169	170	170	170
	Efficiency %	89.0	90.9	92.2	92.5	92.6	93.4	93.6	94.5	94.5	95.1	95.0	95.6	95.7	96.0	96.2
680	Mech. Input HP	1.51	2.37	4.62	6.87	9.44	15.7	22.9	34.1	46.1	59.7	77.8	118	160	265	400
	Out.Torq., in.lbs.	645	1030	2020	3020	4170	6930	10200	15200	20700	26700	35300	53100	72200	120000	181000
	Therm. Input HP	1.51	2.37	3.65	5.28	6.97	13.2	20.1	28.3	35.5	44.8	60.3	79.5	93.7	120	155
	Output RPM	132	132	132	132	132	132	133	133	133	133	133	133	133	133	133
	Efficiency %	89.2	90.8	91.3	91.8	92.2	92.2	93.8	93.8	94.5	94.2	95.5	95.0	95.5	95.8	95.7
575	Mech. Input HP	1.33	2.10	4.09	6.18	8.62	14.3	21.0	31.8	42.9	55.5	71.4	107	145	245	370
	Out.Torq., in.lbs.	662	1070	2110	3200	4480	7480	11000	16400	22700	29300	38300	56000	77000	131000	197000
	Therm. Input HP	1.33	2.10	3.25	4.75	6.20	11.8	17.8	25.1	31.6	39.7	53.6	70.6	82.5	107	140
	Output RPM	111	111	111	111	111	111	112	112	112	112	112	113	113	113	113
	Efficiency %	87.9	90.0	91.1	91.4	91.8	92.4	93.2	91.8	94.2	94.0	95.5	93.4	95.0	95.7	95.2
450	Mech. Input HP	1.09	1.72	3.38	5.16	730	12.4	18.3	27.9	38.4	50.4	65.0	93.7	127	208	315
	Out.Torq., in.lbs.	690	1110	2200	3390	4810	8200	12100	18600	25700	33900	43800	63200	85600	141000	215000
	Therm. Input HP	1.09	1.72	2.75	4.12	5.20	9.95	15.1	21.3	26.7	33.6	45.4	59.8	70.0	92.0	123
	Output RPM	87.1	87.1	87.1	87.1	87.1	87.1	87.8	87.8	87.8	87.8	87.8	88.0	88.2	88.2	88.2
	Efficiency %	87.5	89.2	89.9	90.8	91.1	91.4	92.1	92.9	93.2	93.7	93.9	94.2	94.4	94.9	95.6
300	Mech. Input HP	0.765	1.22	2.42	3.75	5.36	9.32	14.0	21.3	29.9	39.8	52.5	77.6	103	155	240
	Out.Torq., in.lbs.	720	1170	2340	3650	5230	9150	13800	21100	29800	39700	52500	77700	103000	156000	243000
	Therm. Input HP	0.765	1.22	2.19	3.16	4.11	7.67	11.6	16.4	20.6	26.0	35.0	46.1	52.0	75.0	100
	Output RPM	58.1	58.1	58.1	58.1	58.1	58.1	58.5	58.5	58.5	58.5	58.5	58.7	58.8	58.8	58.8
	Efficiency %	86.7	88.4	89.1	89.7	89.9	90.4	91.6	92.0	92.6	92.6	92.9	93.3	93.3	93.9	94.5
100	Mech. Input HP	0.278	0.446	0.900	1.41	2.05	3.65	5.66	8.80	12.5	17.4	23.3	35.6	51.2	82.7	122
	Out.Torq., in.lbs.	757	1250	2530	3990	5830	10500	16100	25300	36200	50200	67500	103000	149000	242000	360000
	Therm. Input HP	0.278	0.446	0.900	1.41	2.05	3.65	5.66	8.80	12.5	17.4	23.3	28.0	32.0	50.0	67.5
	Output RPM	19.4	19.4	19.4	19.4	19.4	19.4	19.5	19.5	19.5	19.5	19.5	19.6	19.6	19.6	19.6
	Efficiency %	83.6	86.1	86.3	86.9	87.3	88.3	88.1	89.0	89.7	89.3	89.7	89.8	90.5	91.0	91.8

Nominal Ratio 7.5:1

WORM SPEED (RPM)	Unit Size	20	25	30	35	40	50	60	70	80	90	100	120	140	170	200
	Center Distance	2	2.5	3	3.5	4	5	6	7	8	9	10	12	14	17	20
	Total Ratio	7.25	7.25	7.25	7.25	7.25	7.25	7.40	7.40	7.40	7.33	7.33	7.33	7.43	7.43	7.43
	Actual Ratio	7-1/4	7-1/4	7-1/4	7-1/4	7-1/4	7-1/4	7-2/5	7-2/5	7-2/5	7-2/6	7-2/6	7-2/6	7-3/7	7-3/7	7-3/7
1750	Mech. Input HP	2.27	3.59	6.40	8.72	11.7	19.7	28.9	43.1	58.8	76.2	98.9	152	215	355	530
	Out.Torq., in.lbs.	525	856	1540	2100	2820	4830	7250	10900	14800	19100	24900	38200	55000	91300	136000
	Therm. Input HP	2.27	3.59	6.40	8.72	11.7	19.7	28.9	40.7	55.0	70.6	89.1	131	172	212	270
	Output RPM	241	241	241	241	241	241	236	236	236	239	239	239	236	236	236
	Efficiency %	88.6	91.3	92.2	92.2	92.3	93.9	94.1	94.9	94.4	95.0	95.4	95.2	95.6	96.1	95.9
1450	Mech. Input HP	2.04	3.26	5.89	8.10	10.8	18.1	26.4	39.3	54.2	70.5	91.3	141	192	315	480
	Out.Torq., in.lbs.	568	936	1710	2360	3150	5330	7980	11900	16400	21300	27700	43000	59500	97800	149000
	Therm. Input HP	2.04	3.26	5.72	8.10	10.8	18.1	26.4	37.1	50.7	65.3	82.3	121	152	195	240
	Output RPM	200	200	200	200	200	200	196	196	196	198	198	198	195	195	195
	Efficiency %	88.4	91.1	92.1	92.5	92.6	93.4	94.0	94.1	94.1	94.8	95.2	95.7	96.0	96.2	96.1
1150	Mech. Input HP	1.77	2.85	5.24	7.29	9.83	16.4	23.7	35.4	48.5	63.2	82.3	128	167	275	425
	Out.Torq., in.lbs.	620	1030	1900	2600	3600	6080	9000	13400	18500	24000	31400	49100	64900	107000	165000
	Therm. Input HP	1.77	2.85	4.94	6.90	9.30	16.4	23.7	33.4	45.3	58.3	74.2	104	129	163	215
	Output RPM	159	159	159	159	159	159	155	155	155	157	157	157	155	155	155
	Efficiency %	88.2	91.0	91.3	89.8	92.2	93.3	93.6	93.3	94.1	94.5	95.0	95.5	95.5	95.6	95.4
865	Mech. Input HP	1.45	2.35	4.39	6.24	8.52	14.6	21.2	30.7	42.1	54.9	71.5	112	142	232	360
	Out.Torq., in.lbs.	673	1120	2100	3020	4120	7130	10700	15400	21300	27700	36000	57000	73100	119000	187000
	Therm. Input HP	1.45	2.35	4.03	5.68	7.60	14.2	21.2	29.2	38.1	47.6	64.1	85.1	103	133	170
	Output RPM	119	119	119	119	119	119	117	117	117	118	118	118	116	116	116
	Efficiency %	87.9	90.2	90.6	91.6	91.5	92.4	93.6	93.0	93.8	94.5	94.3	95.3	95.1	94.8	96.0
680	Mech. Input HP	1.21	1.97	3.73	5.36	7.39	12.9	19.0	28.1	38.3	49.7	64.0	99.7	123	202	304
	Out.Torq., in.lbs.	705	1180	2260	3270	4520	7960	12000	17900	24500	31600	40800	64000	80500	132000	200000
	Therm. Input HP	1.21	1.97	3.35	4.85	6.40	12.0	18.3	25.9	32.3	40.3	54.5	72.4	86.0	114	145
	Output RPM	93.8	93.8	93.8	93.8	93.8	93.8	91.9	91.9	91.9	92.8	92.8	92.8	91.5	91.5	91.5
	Efficiency %	86.7	89.1	90.2	90.8	91.0	91.8	92.1	92.9	93.3	93.6	93.8	94.5	95.1	94.9	95.6
575	Mech. Input HP	1.06	1.72	3.29	4.76	6.64	11.7	17.3	25.7	35.3	46.1	58.8	88.7	112	182	270
	Out.Torq., in.lbs.	725	1220	2340	3410	4770	8500	12900	19200	26700	34600	44300	67100	86300	140000	210000
	Therm. Input HP	1.06	1.72	2.96	4.33	5.65	10.7	16.2	23.0	28.8	35.9	48.5	64.3	77.0	103	130
	Output RPM	79.3	79.3	79.3	79.3	79.3	79.3	77.7	77.7	77.7	78.4	78.4	78.4	77.4	77.4	77.4
	Efficiency %	86.1	89.3	89.5	90.1	90.4	91.4	91.9	92.1	93.3	93.4	93.8	94.2	94.6	94.5	95.5
450	Mech. Input HP	0.867	1.41	2.71	3.95	5.54	10.1	14.9	22.5	31.2	41.0	52.9	80.5	101	155	227
	Out.Torq., in.lbs.	750	1270	2450	3580	5050	9180	14100	21400	29900	39100	50600	77400	99400	152000	224000
	Therm. Input HP	0.867	1.41	2.50	3.72	4.75	9.05	13.7	19.5	24.3	30.4	41.1	54.4	64.0	87.0	112
	Output RPM	62.1	62.1	62.1	62.1	62.1	62.1	60.8	60.8	60.8	61.4	61.4	61.4	60.6	60.6	60.6
	Efficiency %	85.2	88.7	89.0	89.3	89.8	89.5	91.3	91.8	92.5	92.9	93.2	93.7	94.6	94.3	94.8
300	Mech. Input HP	0.589	0.990	1.92	2.83	4.03	7.26	11.1	16.8	23.8	31.7	41.6	65.0	84.7	126	176
	Out.Torq., in.lbs.	755	1320	2580	3810	5420	10000	15600	23700	33800	44800	59100	92800	123000	184000	258000
	Therm. Input HP	0.589	0.990	1.92	2.83	3.73	6.97	10.5	16.8	18.8	23.5	31.7	42.0	50.0	72.0	90.0
	Output RPM	41.4	41.4	41.4	41.4	41.4	41.4	40.5	40.5	40.5	40.9	40.9	40.9	40.4	40.4	40.4
	Efficiency %	84.2	87.5	88.2	88.4	88.3	90.4	90.4	90.7	91.4	91.8	92.3	92.7	93.1	93.6	93.9
100	Mech. Input HP	0.213	0.359	0.720	1.06	1.52	2.84	4.37	6.74	9.70	13.2	17.6	28.6	39.7	62.9	91.9
	Out.Torq., in.lbs.	790	1400	2750	4130	5920	11200	17800	27600	39800	54100	72300	118000	168000	266000	392000
	Therm. Input HP	0.213	0.359	0.720	1.06	1.52	2.84	4.37	6.74	9.70	13.2	17.6	25.0	32.0	47.0	62.0
	Output RPM	13.8	13.8	13.8	13.8	13.8	13.8	13.5	13.5	13.5	13.6	13.6	13.6	13.5	13.5	13.5
	Efficiency %	81.2	85.3	83.6	85.3	85.2	86.3	87.3	87.8	88.0	88.7	88.9	89.3	90.4	90.3	91.1

Ratings based on 1.0 service factor. For A.G.M.A. recommended practice on service factors, see page 11.

Horsepower and Torque Ratings • Single Reduction

Nominal Ratio 10:1

WORM SPEED (RPM)	Unit Size	20	25	30	35	40	50	60	70	80	90	100	120	140	170	200
	Center Distance	2	2.5	3	3.5	4	5	6	7	8	9	10	12	14	17	20
	Total Ratio	9.67	9.67	9.67	9.67	967	9.67	9.75	9.75	9.75	9.75	9.75	9.75	9.80	9.80	9.80
	Actual Ratio	9-2/3	9-2/3	9-2/3	9-2/3	9-2/3	9-2/3	9-3/4	9-3/4	9-3/4	9-3/4	9-3/4	9-3/4	9-4/5	9-4/5	9-4/5
1750	Mech. Input HP	1.74	2.88	5.39	7.64	10.1	16.6	24.0	35.7	48.7	65.1	82.5	129	175	306	464
	Out.Torq., in.lbs.	525	898	1700	2420	3220	5360	7870	11600	16100	21600	27300	43100	58900	104000	156000
	Therm. Input HP	1.74	2.88	5.15	7.33	9.60	16.6	24.0	33.7	45.5	60.3	75.0	112	160	200	255
	Output RPM	181	181	181	181	181	181	179	179	179	179	179	179	179	179	179
	Efficiency %	86 7	89.6	90 6	91.0	91.6	92.7	93.4	92.5	94.1	94.5	94.2	95.1	95.4	96.3	95.3
1450	Mech. Input HP	1.56	2.61	4.91	7.11	937	15.4	21.9	32.8	44.7	60.2	76.3	119	158	277	426
	Out.Torq., in.lbs.	567	977	1870	2710	3610	5970	8650	13000	17800	24000	30500	48100	64000	113000	174000
	Therm. Input HP	1.56	2.61	4.58	6.42	8.54	15.4	21.9	31.0	41.8	55.8	69.4	103	142	180	227
	Output RPM	150	150	150	150	150	150	149	149	149	149	149	149	148	148	148
	Efficiency%	86.5	89.1	90.6	90.7	91.7	92.3	93.2	93.5	94.0	94.1	94.3	95.4	95.1	95.8	95.9
1150	Mech. Input HP	1.34	2.27	4.33	6.42	8.46	13.9	19.8	29.3	40.1	53.5	68.8	108	140	240	380
	Out.Torq., in.lbs.	611	1070	2030	3070	4080	6770	9830	14600	20100	26800	34600	54900	71400	123000	195000
	Therm. Input HP	1.34	2.27	3.94	5.51	7.30	13.3	19.8	27.7	37.5	49.6	62.6	93.7	120	153	195
	Output RPM	119	119	119	119	119	119	118	118	118	118	118	118	117	117	117
	Efficiency %	86.1	89.0	88.5	90.3	91.0	91.9	92.9	93.3	93.8	93.7	94.1	95.1	95.0	95.4	95.5
865	Mech. Input HP	1.08	1.87	3.63	5.52	7.40	12.3	17.7	26.0	35.1	46.4	60.0	94.6	120	204	317
	Out.Torq., in.lbs.	650	1160	2280	3480	4720	7890	11600	17100	23200	30800	40000	63300	81100	138000	216000
	Therm. Input HP	1.08	1.87	3.20	4.51	6.00	11.0	17.7	24.8	33.1	43.3	54.6	81.4	95.0	125	158
	Output RPM	89.5	89.5	89.5	89.5	89.5	89.5	88.7	88.7	88.7	88 7	88.7	88.7	88.3	88.3	88.3
	Efficiency%	85.4	88 1	89.2	89.5	90.6	91.1	92.3	92.6	93.0	93.4	93.8	94.2	94.6	94.7	95.4
680	Mech. Input HP	0.894	1.55	3.07	4.75	6.30	10.8	15.5	23.4	31.9	42.4	54.3	84.0	103	177	270
	Out.Torq., in.lbs.	680	1210	2440	3770	5060	8780	12800	19400	26700	35700	45700	71100	88200	153000	232000
	Therm. Input HP	0.894	1.55	2.68	3.87	4.95	9.26	15.2	21.5	28.6	36.8	49.4	69.1	82.0	107	135
	Output RPM	70.3	70.3	70.3	70.3	70.3	70.3	69.7	69.7	69.7	69.7	69.7	69.7	69.4	69.4	69.4
	Efficiency %	84.9	87 1	88.7	88.6	89.6	90.7	91.4	91.7	92.6	93.2	93.1	93.7	94.3	95.2	94.6
575	Mech. Input HP	0.778	1.36	2.69	4.25	5.63	9.85	14.2	21.2	29.1	39.1	50.0	75.3	93.8	160	240
	Out.Torq., in.lbs.	693	1250	2510	3960	5320	9420	13900	20800	28700	38700	49600	75100	94500	162000	239000
	Therm. Input HP	0.778	1.36	2.40	3.41	4.40	8.29	13.5	19.1	25.4	32.6	46.3	61.5	75.0	95.0	122
	Output RPM	59.5	59.5	59.5	59.5	59.5	59.5	59.0	59.0	59.0	59.0	59.0	59.0	58.7	58.7	58.7
	Efficiency %	84.1	86.7	88.1	87.9	89.2	90.3	91.6	91.8	92.3	92.6	92.8	93.3	93.8	94.3	92.7
450	Mech. Input HP	0.624	1.10	2.22	3.54	4 69	8.37	12.2	18.7	25.6	34.6	44.6	68.3	85.4	139	196
	Out.Torq., in.lbs.	715	1290	2620	4170	5600	10100	15000	23400	32000	43400	56100	86500	109000	178000	250000
	Therm. Input HP	0.624	1.10	2.02	2.91	3.75	6.97	11.4	16.2	21.5	27.6	39.1	52.0	60.0	82.0	105
	Output RPM	46.6	46.6	46.6	46.6	46.6	46.6	46.2	46.2	46.2	46.2	46.2	46.2	45.9	45.9	45.9
	Efficiency %	84.6	86.6	87 2	87.0	88.2	89.1	90.0	91.6	91.5	91.9	92.1	92.7	93.0	93.3	92.9
300	Mech. Input HP	0.440	0.781	1.57	2.54	3.41	6.08	9.00	13.6	19.2	26.4	34.5	54.6	70.5	110	153
	Out.Torq., in.lbs.	740	1340	2740	4430	6040	10900	16400	24900	35500	48900	64400	102000	134000	208000	294000
	Therm. Input HP	0.440	0.781	1.50	2.31	2.92	5.38	8.75	12.5	16.6	21.4	30.1	40.1	48.0	65.0	85.0
	Output RPM	31.0	31.0	31.0	31.0	31.0	31.0	30.8	30.8	30.8	30.8	30.8	30.8	30.6	30.6	30.6
	Efficiency %	82.8	84.5	85.9	85.9	87.2	88.3	89.0	89.4	90.3	90.4	91.1	91.2	92.3	91.8	93.3
100	Mech. Input HP	0.157	0.283	0.576	0.960	1.28	2.33	3.49	5.37	7.71	10.7	14.3	23.4	35.0	53.7	77.2
	Out.Torq., in.lbs.	775	1410	2920	4810	6520	12000	18400	28500	41100	57300	77000	127000	192000	296000	428000
	Therm. Input HP	0.157	0.283	0.576	0.960	1.28	2.33	3.49	5.27	7.56	10.4	13.8	22.3	28.0	45.0	52.0
	Output RPM	10.3	10.3	10.3	10.3	10.3	10.3	10.3	10.3	10.3	10.3	10.3	10.3	10.2	10.2	10.2
	Efficiency%	81.0	81.8	83.2	82.2	83.6	84.5	85.8	86.4	86.8	87.1	87.6	88.3	88.8	89.2	89.8

Nominal Ratio 15:1

WORM SPEED (RPM)	Unit Size	20	25	30	35	40	50	60	70	80	90	100	120	140	170	200
	Center Distance	2	2.5	3	3.5	4	5	6	7	8	9	10	12	14	17	20
	Total Ratio	15.50	15.50	15.50	15.50	15.50	15.50	14.67	14.67	14.67	14.67	14.67	14.67	14.75	14.75	14.75
	Actual Ratio	15-1/2	15-1/2	15-1/2	15-1/2	15-1/2	15-1/2	14-2/3	14-2/3	14-2/3	14-2/3	14-2/3	14-2/3	14-3/4	14-3/4	14-3/4
1750	Mech. Input HP	1.32	2.08	3.92	5.48	7.22	11.6	18.0	26.5	36.8	46.9	62.6	94.1	122	215	325
	Out.Torq., in.lbs.	603	993	1900	2670	3570	5830	8660	12800	17800	23100	30700	46500	60600	107000	164000
	Therm. Input HP	1.32	2.08	3.92	5.48	7.22	11.6	18.0	25.0	34.4	43.5	56.4	81.2	122	170	225
	Output RPM	113	113	113	113	113	113	119	119	119	119	119	119	119	119	119
	Efficiency %	81.8	85.5	86.8	87.3	88.6	90.0	91.1	91.4	91.6	93.2	92.8	93.6	93.5	93.7	95.0
1450	Mech. Input HP	1.18	1.87	3.59	5.15	6.74	10.9	16.4	24.2	33.5	43 1	57.9	88.7	109	192	295
	Out.Torq., in.lbs.	649	1080	2090	3010	4010	6600	9530	14000	19700	25600	34300	52700	65500	115000	178000
	Therm. Input HP	1.18	1.87	3.59	4.96	6.74	10.9	16.4	22.9	31.4	39.9	52.2	76.5	109	155	205
	Output RPM	93.5	93.5	93.5	93.5	93.5	93.5	98.9	98.9	98.9	98.9	98.9	98.9	98.3	98.3	98.3
	Efficiency %	81.6	85.7	86.4	86.8	88.3	89.9	91.2	90.7	92.2	93.2	92.9	93.2	93.7	93.4	94.1
1150	Mech. Input HP	1.02	1.62	3.20	4.61	6.06	9.95	15.0	21.7	29.9	38.3	51.8	80.2	96.2	165	265
	Out.Torq., in.lbs.	696	1170	2330	3380	4510	7570	10900	15900	22100	28500	38500	59900	72700	124000	202000
	Therm. Input HP	1.02	1.62	3.05	4.26	5.80	9.44	15.0	20.5	28.0	35.5	46.7	69.2	96.2	135	175
	Output RPM	74.2	74.2	74.2	74.2	74.2	74.2	78.4	78.4	78.4	78.4	78.4	78.4	78.0	78.0	78.0
	Efficiency %	80.3	85.0	85 7	86.3	87.6	89.6	90.4	91.2	92.0	92.6	92.5	92.9	93.5	93.0	94.3
865	Mech. Input HP	0.828	1.33	2.67	3.94	5.22	8.63	13.4	19.4	26.6	34.0	44.9	69.6	84.5	138	225
	Out.Torq., in.lbs.	744	1260	2550	3820	5120	8640	12800	18600	25800	33400	44100	68700	84300	138000	227000
	Therm. Input HP	0.828	1.33	2.50	3.52	4.67	7.75	13.3	18.4	25.1	31.8	40.9	60.6	84.5	110	145
	Output RPM	55.8	55.8	55.8	55.8	55.8	55.8	59.0	59.0	59.0	59.0	59.0	59.0	58.6	58.6	58.6
	Efficiency %	79.6	83.9	84.6	85 8	86.9	88.6	89.4	89.7	90.8	91.9	91.9	92.4	92.8	93.0	93.9
680	Mech. Input HP	0.687	1.11	2.26	3.40	4.50	7.59	11.8	17.3	23.9	30.6	41.0	62.4	75.7	120	192
	Out.Torq., in.lbs.	780	1320	2720	4110	5550	9610	14300	21100	29500	38000	50800	77700	95400	153000	246000
	Therm. Input HP	0.687	1.11	2.07	2.99	3.85	6.56	11.4	15.7	21.3	28.2	37.3	54.3	72.0	93.0	125
	Output RPM	43.9	43.9	43.9	43.9	43.9	43.9	46.4	46.4	46.4	46.4	46.4	46.4	46.1	46.1	46.1
	Efficiency %	79.0	82.8	83.8	84.1	85.9	88.1	89.1	89.7	90.8	91.4	91.1	91.6	92.2	93.3	93.7
575	Mech. Input HP	0.603	0.968	2.00	3.03	4.01	6.74	10.7	15.8	22.0	27.9	37.8	56.0	70.2	108	174
	Out.Torq., in.lbs.	800	1350	2810	4300	5790	10000	15200	22500	31700	40900	55000	82200	104000	160000	263000
	Therm. Input HP	0.603	0.968	1.82	2.63	3.45	5.86	10.0	14.0	18.9	25.0	33.7	51.0	64.0	82.0	113
	Output RPM	37.1	37.1	37.1	37.1	37.1	37.1	39.2	39.2	39.2	39.2	39.2	39.2	39.0	39.0	39.0
	Efficiency %	78.1	82.1	82.7	83.5	85.0	87.3	88.4	88.6	89.6	91.2	90.5	91.3	91.6	91.6	93.5
450	Mech. Input HP	0.487	0.792	1.60	2.53	3.33	5.65	9.09	13.6	19.2	24.1	33.5	50.8	64.4	97.2	150
	Out.Torq., in.lbs.	820	1400	2920	4520	6080	10600	16300	24600	35000	44800	61800	94400	121000	184000	287000
	Therm. Input HP	0.487	0.792	1.55	2.20	2.95	4 .94	8.55	11.8	16.1	21.2	28.5	43.1	54.0	72.0	97.0
	Output RPM	29.0	29.0	29.0	29.0	29.0	29.0	30.7	30.7	30 7	30.7	30.7	30.7	30.5	30.5	30.5
	Efficiency %	77.6	81.4	84.1	82.3	84.1	86.4	87.3	88.1	88.7	90.5	89.8	90.5	91.0	91.6	92.6
300	Mech. Input HP	0.338	0.554	118	1.82	2.42	4.12	6.55	10.1	14.3	18.0	25.9	40.1	52.5	82.0	118
	Out.Torq., in.lbs.	847	1450	3070	4790	6500	11400	17400	26900	38500	49400	70500	110000	146000	230000	324000
	Therm. Input HP	0.338	0.554	1.18	1.65	2.31	3.82	6.55	9.07	12.4	16.4	22.0	33.3	44.0	57.0	77.0
	Output RPM	19.4	19.4	19.4	19.4	19.4	19.4	20.5	20.5	20.5	20.5	20.5	20.5	20.3	20.3	20.3
	Efficiency %	77.0	80.4	79.9	80.8	82.5	85.0	86.2	86.4	87.4	89.1	88.3	89.0	89.7	90.5	88.6
100	Mech. Input HP	0.125	0.205	0.439	0.697	0.914	1.57	2.61	4.05	5.76	7.03	10.7	17.2	23.7	39.1	58.0
	Out.Torq., in.lbs.	885	1520	3260	5180	7000	12400	19800	30800	44200	55500	83200	135000	188000	313000	472000
	Therm. Input HP	0.125	0.205	0.439	0.697	0.914	1.57	2.61	3.97	5.65	6.90	10.3	16.4	23.7	37.0	55.0
	Output RPM	6.45	6.45	6.45	6.45	6.45	6.45	6 82	6.82	6.82	6.82	6.82	6.82	6.78	6.78	6.78
	Efficiency %	72.5	75.9	76.0	76.1	78.4	80.8	82.1	82.3	83.0	85.4	84.1	84.9	85.3	86.1	87.5

Ratings based on 1.0 service factor. For A.G.M.A. recommended practice on service factors, see page 11.

Horsepower and Torque Ratings • Single Reduction

Nominal Ratio 20:1

WORM SPEED (RPM)	Unit Size	20	25	30	35	40	50	60	70	80	90	100	120	140	170	200
	Center Distance	2	2.5	3	3.5	4	5	6	7	8	9	10	12	14	17	20
	Total Ratio	20.50	20.50	20.50	20.50	20.50	20.50	20.50	20.50	20.50	20.50	20.50	20.50	19.67	19.67	19.67
	Actual Ratio	20-1/2	20-1/2	20-1/2	20-1/2	20-1/2	20-1/2	20-1/2	20-1/2	20-1/2	20-1/2	20-1/2	20-1/2	19-2/3	19-2/3	19-2/3
1750	Mech. Input HP	1.08	1.66	3.07	4.48	5. 74	9.28	14.0	20.7	28.1	37.8	48.2	74.0	95.1	156	252
	Out.Torq., in.lbs.	623	1010	1920	2750	3660	6000	9160	13600	18600	25100	32400	50100	62400	103000	166000
	Therm. Input HP	1.08	1.66	3.07	4.48	5.74	9.28	14.0	19.6	26.3	35.0	43.5	63.8	95.1	142	190
	Output RPM	85.4	85.4	85.4	85 4	85.4	85.4	85.4	85.4	85.4	85.4	85.4	85.4	89.0	89.0	89.0
	Efficiency %	78.1	82.4	84.7	83.1	86.4	87.6	88.6	89.0	89.7	89.9	91.0	91.7	92.6	93.2	93.0
1450	Mech. Input HP	0.982	1.48	2. 78	4.05	5.32	8.57	12.8	19.1	25.7	34.2	44.6	68.4	83.6	142	225
	Out.Torq., in.lbs.	657	1090	2080	3060	4080	6660	10000	15200	20500	27400	35900	55600	66100	113000	179000
	Therm. Input HP	0.982	1.48	2.78	4.05	5.32	8.57	12.8	18.1	24.1	31.7	40.2	59.0	83.6	130	180
	Output RPM	70.7	70.7	70.7	70.7	70.7	70.7	70.7	70.7	70.7	70.7	70.7	70.7	73.7	73.7	73.7
	Efficiency %	75.1	82.7	84.0	84.8	86.1	87.2	87.7	89.3	89.5	89.9	90.3	91.2	92.5	93.1	93.1
1150	Mech. Input HP	0.821	1.28	2.43	3.63	4.76	7.87	11.7	17.2	23.1	30.8	40.0	61.7	76.0	125	200
	Out.Torq., in.lbs.	708	1170	2300	3420	4560	7650	11500	17100	23100	31100	40500	63100	75400	125000	201000
	Therm. Input HP	0.821	1.28	2.43	3.50	4.76	7.87	11.7	16.3	21.6	28.6	36.1	53.2	76.0	112	160
	Output RPM	56.1	56.1	56.1	56.1	56.1	56.1	56.1	56.1	56.1	56.1	56.1	56.1	58.5	58.5	58.5
	Efficiency %	76.8	81.4	84.2	83.9	85.3	86.5	87.5	88.5	89.0	89.9	90.1	91.0	92.0	92.8	93.2
865	Mech. Input HP	0.667	1.05	2.01	3.08	4.07	6.88	10.4	15.4	20.4	26.8	34.8	54.0	67.1	109	163
	Out.Torq., in.lbs.	755	1260	2480	3810	5120	8780	13400	20000	26800	35500	46300	72400	87700	143000	217000
	Therm. Input HP	0.667	1.05	2.01	2.88	3.97	6.88	10.4	14.7	19.3	25.1	31.7	47.0	67.1	95.0	135
	Output RPM	42.2	42.2	42.2	42.2	42.2	42.2	42.2	42.2	42.2	42.2	42.2	42.2	44.0	44.0	44.0
	Efficiency %	75.8	80.3	82.6	82.8	84.2	85.4	86.3	86.9	88.0	88.7	89.1	89.8	91.2	91.6	92.9
680	Mech. Input HP	0.556	0.873	1.70	2.64	3.50	6.00	9.28	13.8	18.6	24.6	31.7	48.4	59.7	92.3	144
	Out.Torq., in.lbs.	790	1320	2620	4090	5530	9620	15100	22600	30900	41000	53400	82100	98600	154000	242000
	Therm. Input HP	0.556	0.873	1.70	2.41	3.25	6.00	9.28	13.0	17.6	22.2	27.4	42.1	59.7	80.0	115
	Output RPM	33.2	33.2	33.2	33.2	33.2	33.2	33.2	33.2	33.2	33.2	33.2	33.2	34.6	34.6	34.6
	Efficiency %	74.8	79.6	81.1	81.5	83.2	84.4	85.6	86.2	87.4	87.7	88.7	89.3	90.6	91.5	92.2
575	Mech. Input HP	0.484	0.766	1.50	2.35	3.11	5.42	8.38	12.6	17.0	22.6	29.3	43.6	55.9	85.1	130
	Out.Torq., in.lbs.	806	1350	2700	4250	5750	10200	16000	24400	32900	44300	57700	87000	108000	167000	256000
	Therm. Input HP	0.484	0.766	1.50	2.18	2.90	5.36	8.38	11.6	15.8	19.7	24.4	38.7	55.9	73.0	102
	Output RPM	28.0	28.0	28.0	28.0	28.0	28.0	28.0	28.0	28.0	28.0	28.0	28.0	29.2	29.2	29.2
	Efficiency %	74.1	78.4	80.1	80.5	82.3	83.8	85.0	86.2	86.1	87.2	87.6	88.8	89.6	91.0	91.4
450	Mech. Input HP	0.394	0.617	1.22	1.96	2.59	4.56	7.23	10.9	14.9	20.1	26.2	39.3	51.1	77.2	113
	Out.Torq., in.lbs.	830	1380	2800	4450	6030	10800	17300	26400	36400	49600	65100	99200	126000	191000	284000
	Therm. Input HP	0.394	0.617	1.22	1.82	2.45	4.52	7.23	9.80	13.4	16.7	20.6	32.7	48.0	62.0	87.0
	Output RPM	22.0	22.0	22.0	22.0	22.0	22.0	22.0	22.0	22.0	22.0	22.0	22.0	22.9	22.9	22.9
	Efficiency %	73.4	77.9	79.9	79.1	81.1	82.5	83.3	84.4	85.1	85.9	86.5	87.9	89.5	89.8	91.2
300	Mech. Input HP	0.278	0.436	0.860	1.40	1.86	3.36	5.36	8.08	11.2	15.3	20.4	31.1	41.0	65.0	92.5
	Out.Torq., in.lbs.	860	1440	2920	4700	6370	11600	18800	28600	40300	55700	74400	115000	148000	238000	342000
	Therm. Input HP	0.278	0.436	0.860	1.40	1.86	3.36	5.36	7.56	10.3	12.9	15.9	25.2	38.0	50.0	72.0
	Output RPM	14.6	14.6	14.6	14.6	14.6	14.6	14.6	14.6	14.6	14.6	14.6	14.6	15.3	15.3	15.3
	Efficiency %	71.8	76.7	78.8	78.0	79.5	80.2	81.4	82.2	83.5	84.5	84.7	85.9	87.4	88.6	89.5
100	Mech. Input HP	0.102	0.160	0.324	0.536	0.709	1.30	2.13	3.26	4.59	6.44	8.60	13.4	18.9	31.2	45.8
	Out.Torq., in.lbs.	895	1500	3080	5040	6860	12700	21100	32800	46400	65500	88400	139000	193000	322000	480000
	Therm. Input HP	0.102	0.160	0.324	0.536	0.709	1.30	2.13	3.20	4.50	6.25	8.27	12.8	18.9	31.2	45.8
	Output RPM	4.88	4.88	4.88	4.88	4.88	4.88	4.88	4.88	4.88	4.88	4.88	4.88	5.08	5.08	5.08
	Efficiency %	67.9	72.6	73.6	72.8	74.9	75.6	76.7	77.9	78.2	78.7	79.6	80.3	82.4	83.3	84.6

Nominal Ratio 25:1

WORM SPEED (RPM)	Unit Size	20	25	30	35	40	50	60	70	80	90	100	120	140	170	200
	Center Distance	2	2.5	3	3.5	4	5	6	7	8	9	10	12	14	17	20
	Total Ratio	25.00	25.00	24.50	24.50	24.50	24.50	24.50	24.50	24.50	24.50	24.50	24.50	24.50	24.50	24.50
	Actual Ratio	25	25	24-1/2	24-1/2	24-1/2	24-1/2	24-1/2	24-1/2	24-1/2	24-1/2	24-1/2	24-1/2	24-1/2	24-1/2	24-1/2
1750	Mech. Input HP	0.950	1.46	2. 71	3.82	4.91	7.94	11.9	17.8	24.1	31.6	40.9	63.4	82.2	137	215
	Out.Torq., in.lbs.	620	1040	1970	2780	3670	6040	9180	13800	18800	24800	32300	50500	66100	111000	175000
	Therm. Input HP	0.950	1.46	2.71	3.82	4.91	7.94	11.9	16.8	22.6	29.3	36.9	54.7	82.2	127	165
	Output RPM	70.0	70.0	71.4	71.4	71.4	71.4	71.4	71.4	71.4	71.4	71.4	71.4	71.4	71.4	71.4
	Efficiency %	72.5	79.1	82.4	82.5	84.7	86.2	87.4	87.9	88.4	88.9	89.5	90.3	91.1	91.8	92.2
1450	Mech. Input HP	0.861	1.33	2.45	3.53	4.54	7.40	10.9	16.3	22.1	28.9	37.7	58.6	72.0	127	192
	Out.Torq., in.lbs.	680	1140	2150	3100	4080	6750	10100	15200	20700	27300	35800	56300	69800	124000	188000
	Therm. Input HP	0.861	1.33	2.45	3.53	4.54	7.40	10.9	15.4	20.7	26.8	34.0	50.6	72.0	115	150
	Output RPM	58.0	58.0	59.2	59.2	59.2	59.2	59.2	59.2	59.2	59.2	59.2	59.2	59.2	59.2	59.2
	Efficiency %	72.7	78.9	82.4	82.5	84.4	85.7	87.0	87.6	88.0	88.7	89.2	90.2	91.0	91.7	91.9
1150	Mech. Input HP	0.751	1.17	2.17	3.16	4.06	6.75	10.0	14.7	19.9	26.1	33.3	53.1	63.7	112	165
	Out.Torq., in.lbs.	740	1240	2360	3460	4550	7710	11600	17200	23300	30800	39600	63800	77500	137000	203000
	Therm. Input HP	0.751	1.17	2.17	3.16	4.06	6.75	10.0	13.9	18.5	24.1	30.0	45.8	63.7	100	130
	Output RPM	46.0	46.0	46.9	46.9	46.9	46.9	46.9	46.9	46.9	46.9	46.9	46.9	46.9	46.9	46.9
	Efficiency %	71.9	77.4	81.0	81.5	83.5	85.1	86.4	87.1	87.2	87.9	88.6	89.5	90.6	91.1	91.6
865	Mech. Input HP	0.623	0.980	1.81	2.72	3.45	5.89	8.86	13.1	17.7	22.8	29.7	46.2	55.9	94.1	134
	Out.Torq., in.lbs.	798	1350	2580	3890	5070	8820	13500	20100	27300	35600	46300	73000	89600	151000	219000
	Therm. Input HP	0.623	0.980	1.81	2.72	3.45	5.89	8.86	12.5	16.7	21.4	26.9	40.2	55.9	82.0	110
	Output RPM	34.6	34.6	35.3	35.3	35.3	35.3	35.3	35.3	35.3	35.3	35.3	35.3	35.3	35.3	35.3
	Efficiency %	70.3	75.6	79.9	80.1	82.3	83.9	85.4	86.0	86.4	87.5	87.3	88.5	89.8	89.9	91.6
680	Mech. Input HP	0.527	0.824	1.53	2.33	2.96	5.12	7.87	11.7	16.0	20.9	27.1	41.7	50.0	81.2	114
	Out.Torq., in.lbs.	840	1420	2720	4160	5450	9630	15000	22600	31100	41100	53400	83000	101000	165000	234000
	Therm. Input HP	0.527	0.824	1.53	2.33	2.96	5.07	7.87	11.2	15.1	19.6	24.4	36.2	50.0	70.0	95.0
	Output RPM	27.2	27.2	27.8	27.8	27.8	27.8	27.8	27.8	27.8	27.8	27.8	27.8	27.8	27.8	27.8
	Efficiency %	68.8	74.4	78.3	78.6	81.1	82.8	83.9	85.1	85.6	86.6	86.8	87.7	89.0	89.5	90.4
575	Mech. Input HP	0.445	0.727	1.35	2.07	2.62	4.59	7.11	10.7	14.5	19.3	24.9	37.7	47.0	73.0	106
	Out.Torq., in.lbs.	860	1470	2790	4320	5640	10100	15900	24100	33300	44400	57500	88000	111000	174000	257000
	Therm. Input HP	0.445	0.727	1.35	2.07	2.62	4.55	7.11	10.2	13.9	17.4	21.6	34.3	47.0	62.0	85.0
	Output RPM	23.0	23.0	23.5	23.5	23.5	23.5	23.5	23.5	23.5	23.5	23.5	23.5	23.5	23.5	23.5
	Efficiency %	70.5	73.8	77.0	77.7	80.2	81.9	83.3	83.9	85.5	85.7	86.0	86.9	87.9	88.8	90.3
450	Mech. Input HP	0.384	0.598	1.11	1.73	2.19	3.85	6.07	9.22	12.7	17.0	22.2	34.1	43.1	64.8	89.5
	Out.Torq., in.lbs.	890	1520	2910	4530	5940	10600	17000	26700	36700	49200	64600	100000	129000	196000	274000
	Therm. Input HP	0.384	0.598	1.11	1.73	2.19	3.73	6.07	8.61	11.7	14.7	18.3	29.3	42.0	55.0	75.0
	Output RPM	18.0	18.0	18.4	18.4	18.4	18.4	18.4	18.4	18.4	18.4	18.4	18.4	18.4	18.4	18.4
	Efficiency %	66.2	72.6	76.4	76.3	79.0	80.2	81.6	84.4	84.2	84.3	84.8	85.5	87.2	88.1	89.2
300	Mech. Input HP	0.272	0.426	0.792	1.25	1.57	2.83	4.53	6.82	9.58	13.1	17.2	27.0	35.4	54.5	77.6
	Out.Torq., in.lbs.	925	1580	3040	4790	6250	11400	18500	28200	40200	55100	73200	117000	155000	242000	345000
	Therm. Input HP	0.272	0.426	0.792	1.25	1.57	2.83	4.53	6.65	9.01	11.4	14.1	22.7	34.0	45.0	62.0
	Output RPM	12.0	12.0	12.2	12.2	12.2	12.2	12.2	12.2	12.2	12.2	12.2	12.2	12.2	12.2	12.2
	Efficiency %	64.8	70.6	74.6	74.5	77.3	78.3	79.3	80.3	81.5	81.7	82.7	84.2	85.1	86.3	86.4
100	Mech. Input HP	0.099	0.160	0.294	0.482	0.596	1.10	1.78	2.73	3.88	5.38	7.21	11.7	16.1	26.5	37.9
	Out.Torq., in.lbs.	970	1660	3220	5130	6690	12600	20400	31900	46000	63700	85900	142000	198000	329000	480000
	Therm. Input HP	0.099	0.160	0.294	0.482	0.596	1.10	1.78	2.73	3.88	5.38	7.21	11.7	16.1	26.5	37.9
	Output RPM	4.00	4.00	4.08	4.08	4.08	4.08	4.08	4.08	4.08	4.08	4.08	4.08	4.08	4.08	4.08
	Efficiency %	62.2	65.8	70.9	68.9	72.7	74.2	74.2	75.7	76.8	76.7	77.2	78.6	79.6	80.4	82.0

Ratings based on 1.0 service factor. For A.G.M.A. recommended practice on service factors, see page 11.

Horsepower and Torque Ratings • Single Reduction

Nominal Ratio 30:1

WORM SPEED (RPM)	Unit Size	20	25	30	35	40	50	60	70	80	90	100	120	140	170	200
	Center Distance	2	2.5	3	3.5	4	5	6	7	8	9	10	12	14	17	20
	Total Ratio	30.00	30.00	30.00	30.00	30.00	29.50	29.50	29.50	29.50	29.50	29.50	29.50	29.50	29.50	29.50
	Actual Ratio	30	30	30	30	30	29-1/2	29-1/2	29-1/2	29-1/2	29-1/2	29-1/2	29-1/2	29-1/2	29-1/2	29-1/2
1750	Mech. Input HP	0.806	1.25	2.31	3.24	4.23	6.80	10.2	14.8	20.2	26.5	35.1	53.3	68.8	120	195
	Out.Torq., in.lbs.	620	1040	1970	2770	3710	6070	9220	13600	18700	24800	33100	50500	65500	115000	189000
	Therm. Input HP	0.806	1.25	2.31	3.24	4.23	6.80	10.2	14.0	18.9	24.6	31.7	46.0	68.8	110	140
	Output RPM	58.3	58.3	58.3	58.3	58.3	59.3	59.3	59.3	59.3	59.3	59.3	59.3	59.3	59.3	59.3
	Efficiency %	71.2	77.0	78.9	79.1	81.2	84.0	85.1	86.5	87.1	88.1	88.8	89.2	89.6	90.2	91.2
1450	Mech. Input HP	0.718	1.13	2.13	3.03	3.96	6.34	9.36	13.6	18.5	24.4	32.1	49.3	62.5	112	175
	Out.Torq., in.lbs.	670	1120	2170	3100	4160	6800	10200	15000	20600	27300	36400	56200	71500	130000	204000
	Therm. Input HP	0.718	1.13	2.13	3.03	3.96	6.34	9.36	12.9	17.3	22.6	29.0	42.5	62.5	102	132
	Output RPM	48.3	48.3	48.3	48.3	48.3	49.2	49.2	49.2	49.2	49.2	49.2	49.2	49.2	49.2	49.2
	Efficiency%	71.6	76.0	78.1	78.5	80.6	83.6	85.0	86.0	86.8	87.3	88.4	88.9	89.2	90.5	90.9
1150	Mech. Input HP	0.622	0.994	1.90	2.75	3.58	5.80	8.59	12.4	16.6	21.9	29.0	44.4	53.5	100	150
	Out.Torq., in.lbs.	720	1230	2400	3500	4960	7760	11600	17100	23200	30700	41000	63300	77000	145000	219000
	Therm. Input HP	0.622	0.994	1.90	2.75	3.58	5.80	8.59	11.7	15.6	20.3	26.2	38.3	53.5	87.0	117
	Output RPM	38.3	38.3	38.3	38.3	38.3	39.0	39.0	39.0	39.0	39.0	39.0	39.0	39.0	39.0	39.0
	Efficiency %	70.4	75.3	76.8	77.4	84.3	82.8	83.5	85.3	86.4	86.7	87.4	88.2	89.0	89.7	90.3
865	Mech. Input HP	0.515	0.812	1.61	2.38	3.09	5.06	7.64	11.0	14.9	19.4	25.5	38.7	47.1	83.5	116
	Out.Torq., in.lbs.	773	1310	2650	3960	5290	8850	13500	20000	27300	35700	47500	72600	89200	155000	224000
	Therm. Input HP	0.515	0.812	1.61	2.38	3.09	5.06	7.64	10.5	14.1	18.2	23.2	33.7	47.1	73.0	97.0
	Output RPM	28.8	28.8	28.8	28.8	28.8	29.3	29.3	29.3	29.3	29.3	29.3	29.3	29.3	29.3	29.3
	Efficiency%	68.7	73.8	75.3	76.1	78.3	81.4	82.2	84.6	85.2	85.6	86.7	87.3	88.1	86.4	89.8
680	Mech. Input HP	0.429	0.684	1.38	2.07	2.69	4.42	6.79	9.84	13.4	17.6	23.5	35.1	42.2	70.0	96.0
	Out.Torq., in.lbs.	808	1380	2820	4260	5730	9680	15100	22300	30800	40900	55000	83000	100000	169000	234000
	Therm. Input HP	0.429	0.684	1.38	2.07	2.69	4.25	6.79	9.38	12.7	16.5	20.2	30.6	42.2	62.0	85.0
	Output RPM	22.7	22.7	22.7	22.7	22.7	23.1	23.1	23.1	23.1	23.1	23.1	23.1	23.1	23.1	23.1
	Efficiency %	67.7	72.6	73.5	74.0	76.6	80.1	81.3	82.9	84.1	85.0	85.6	86.5	86.7	88.3	89.1
575	Mech. Input HP	0.376	0.600	1.22	1.86	2.41	3.99	6.16	8.87	12.2	16.2	21.3	31.7	39.8	64.9	85.1
	Out.Torq., in.lbs.	827	1410	2910	4460	5990	10200	16000	23600	32900	43800	58500	87800	111000	184000	243000
	Therm. Input HP	0.376	0.600	1.22	1.86	2.41	3.80	6.16	8.53	11.7	14.7	18.0	28.9	39.8	55.0	77.0
	Output RPM	19.2	19.2	19.2	19.2	19.2	19.5	19.5	19.5	19.5	19.5	19.5	19.5	19.5	19.5	19.5
	Efficiency %	66.9	71.5	72.5	72.9	75.6	79.1	80.3	82.3	83.4	83.6	84.9	85.7	86.3	87.7	88.3
450	Mech. Input HP	0.307	0.492	1.02	1.57	2.03	3.35	5.28	7.62	10.6	14.2	18.9	28.6	36.3	55.2	76.8
	Out.Torq., in.lbs.	846	1450	3050	4690	6300	10800	17200	25400	36000	48600	65100	99500	128000	197000	277000
	Therm. Input HP	0.307	0.492	1.02	1.57	2.03	3.20	5.28	7.33	10.1	12.4	15.2	26.0	36.3	47.0	67.0
	Output RPM	15.0	15.0	15.0	15.0	15.0	15.3	15.3	15.3	15.3	15.3	15.3	15.3	15.3	15.3	15.3
	Efficiency %	65.6	70.1	71.2	71.1	73.9	78.0	78.8	80.7	82.2	82.8	83.4	84.2	85.3	86.4	87.3
300	Mech. Input HP	0.218	0.350	0.731	1.15	1.48	2.47	3.96	5.62	7.98	10.8	14.4	22.4	29.9	46.3	65.6
	Out.Torq., in.lbs.	876	1510	3180	4980	6710	11500	18700	27300	39200	53500	72500	114000	153000	242000	347000
	Therm. Input HP	0.218	0.350	0.731	1.15	1.48	2.47	3.96	5.51	7.75	9.62	11.7	20.8	29.9	37.0	55.0
	Output RPM	10.0	10.0	10.0	10.0	10.0	10.2	10.2	10.2	10.2	10.2	10.2	10.2	10.2	10.2	10.2
	Efficiency %	63.8	68.5	69.0	68.7	71.9	75.1	76.2	78.4	79.3	79.9	81.2	82.1	82.6	84.3	85.4
100	Mech. Input HP	0.082	0.133	0.283	0.452	0.580	0.966	1.63	2.24	3.22	4.42	5.90	9.63	13.6	22.5	32.9
	Out.Torq., in.lbs.	920	1590	3390	5370	7240	12600	20800	30600	44200	61400	83000	136000	191000	326000	484000
	Therm. Input HP	0.082	0.133	0.283	0.452	0.580	0.966	1.63	2.24	3.22	4.42	5.90	9.63	13.6	22.5	32.9
	Output RPM	3.33	3.33	3.33	3.33	3.33	3.39	3.39	3.39	3.39	3.39	3.39	3.39	3.39	3.39	3.39
	Efficiency%	59.3	63.2	63.4	62.8	66.0	70.2	68.6	73.5	73.8	74.7	75.7	76.0	75.5	77.9	79.1

Nominal Ratio 40:1

WORM SPEED (RPM)	Unit Size	20	25	30	35	40	50	60	70	80	90	100	120	140	170	200
	Center Distance	2	2.5	3	3.5	4	5	6	7	8	9	10	12	14	17	20
	Total Ratio	40.00	40.00	40.00	40.00	40.00	40.00	40.00	40.00	40.00	40.00	40.00	40.00	39.50	39.50	39.50
	Actual Ratio	40	40	40	40	40	40	40	40	40	40	40	40	39-1/2	39-1/2	39-1/2
1750	Mech. Input HP	0.654	0.972	1.79	2.55	3.31	5.25	7.83	11.5	16.2	19.8	26.3	40.3	49.9	89.4	135
	Out.Torq., in.lbs.	625	1020	1930	2750	3690	6010	9150	13600	19600	24300	32100	49800	62100	112000	170000
	Therm. Input HP	0.654	0.972	1.79	2.55	3.31	5.25	7.83	10.9	15.2	18.4	23.7	34.8	49.9	89.4	115
	Output RPM	43.8	43.8	43.8	43.8	43.8	43.8	43.8	43.8	43.8	43.8	43.8	43.8	44.3	44.3	44.3
	Efficiency %	66.3	72.8	74.8	74.9	77.4	79.5	81.1	82.1	84.0	85.2	84.7	85.8	87.5	88.1	88.5
1450	Mech. Input HP	0.586	0.874	1.63	2.39	3.08	4.88	7.15	10.5	14.2	18.1	24.3	38.1	46.3	81.0	125
	Out.Torq., in.lbs.	675	1100	2110	3080	4120	6710	10100	15000	20500	26600	35600	56400	69400	124000	190000
	Therm. Input HP	0.586	0.874	1.63	2.39	3.08	4.88	7.15	9.96	13.3	16.8	21.9	32.9	46.3	80.0	105
	Output RPM	36.3	36.3	36.3	36.3	36.3	36.3	36.3	36.3	36.3	36.3	36.3	36.3	36.7	36.7	36.7
	Efficiency %	66.3	72.4	74.5	74.1	76.9	79.1	81.2	82.2	83.0	84.5	84.3	85.1	87.3	89.2	88.5
1150	Mech. Input HP	0.506	0.748	1.44	2.16	2.78	4.51	6.65	9.61	13.3	16.3	21.9	33.7	42.0	71.0	110
	Out.Torq., in.lbs.	723	1180	2310	3450	4610	7670	11600	17000	24200	29900	40100	62600	78500	134000	210000
	Therm. Input HP	0.506	0.748	1.44	2.16	2.78	4.51	6.65	9.07	12.5	15.1	19.8	29.1	42.0	70.0	90.0
	Output RPM	28.8	28.8	28.8	28.8	28.8	28.8	28.8	28.8	28.8	28.8	28.8	28.8	29.1	29.1	29.1
	Efficiency %	65.2	72.0	73.2	72.9	75.6	77.6	79.6	80.7	83.0	83.7	83.5	84.7	86.3	87.2	88.2
865	Mech. Input HP	0.417	0.626	1.21	1.86	2.39	3.95	5.91	8.64	11.5	14.6	19.3	29.5	37.1	62.5	90.0
	Out.Torq., in.lbs.	773	1270	2520	3860	5170	8770	13400	20000	27100	35200	46200	71700	90900	155000	227000
	Therm. Input HP	0.417	0.626	1.21	1.86	2.39	3.95	5.91	8.23	10.9	13.7	17.6	25.7	37.1	62.0	77.0
	Output RPM	21.6	21.6	21.6	21.6	21.6	21.6	21.6	21.6	21.6	21.6	21.6	21.6	21.9	21.9	21.9
	Efficiency %	63.6	69.6	71.5	71.2	74.2	76.2	77.8	79.4	80.9	82.7	82.1	83.4	85.1	86.2	87.6
680	Mech. Input HP	0.350	0.521	1.03	1.62	2.08	3.45	5.27	7.73	10.5	13.3	17.8	26.9	33.6	55.0	76.2
	Out.Torq., in.lbs.	805	1310	2650	4170	5580	9570	15000	22300	30800	40000	53200	81600	103000	172000	240000
	Therm. Input HP	0.350	0.521	1.03	1.62	2.08	3.45	5.27	7.37	9.91	12.5	16.2	23.4	33.6	48.0	65.0
	Output RPM	17.0	17.0	17.0	17.0	17.0	17.0	17.0	17.0	17.0	17.0	17.0	17.0	17.2	17.2	17.2
	Efficiency %	62.0	67.8	69.4	69.4	72.4	74.8	76.8	77.8	79.1	81.1	80.6	81.8	83.7	85.4	86.0
575	Mech. Input HP	0.308	0.462	0.911	1.46	1.86	3.12	4.79	7.03	9.59	12.1	16.4	24.3	31.7	50.0	70.0
	Out.Torq., in.lbs.	830	1360	2740	4340	5790	10000	15900	23700	32800	42900	57300	86300	114000	184000	258000
	Therm. Input HP	0.308	0.462	0.911	1.46	1.86	3.12	4.79	6.76	9.14	11.5	15.2	22.1	31.7	42.0	60.0
	Output RPM	14.4	14.4	14.4	14.4	14.4	14.4	14.4	14.4	14.4	14.4	14.4	14.4	14.6	14.6	14.6
	Efficiency %	61.5	67.1	68.6	67.8	71.0	73.1	75.7	76.9	78.0	80.9	79.7	81.0	83.1	85.0	85.1
450	Mech. Input HP	0.252	0.378	0.746	1.22	1.57	2.64	4.13	6.13	8.41	10.7	14.6	22.1	28.8	45.0	59.0
	Out.Torq., in.lbs.	848	1400	2840	4550	6080	10600	17000	25800	36100	47100	64100	98400	130000	207000	274000
	Therm. Input HP	0.252	0.378	0.746	1.22	1.57	2.64	4.13	5.90	8.01	10.1	12.9	20.1	28.8	37.0	52.0
	Output RPM	11.3	11.3	11.3	11.3	11.3	11.3	11.3	11.3	11.3	11.3	11.3	11.3	11.4	11.4	11.4
	Efficiency %	60.1	66.1	68.0	66.6	69.1	71.7	73.5	75.1	76.6	78.6	78.4	79.5	81.6	83.1	83.9
300	Mech. Input HP	0.180	0.270	0.550	0.898	1.14	1.95	3.11	4.56	6.38	8.06	11.4	17.7	23.5	35.3	50.6
	Out.Torq., in.lbs.	878	1440	2960	4810	6430	11400	18500	27700	39400	51500	72200	114000	155000	236000	343000
	Therm. Input HP	0.180	0.270	0.550	0.898	1.14	1.95	3.11	4.48	10.9	7.75	9.91	16.4	23.5	28.0	42.0
	Output RPM	7.50	7.50	7.50	7.50	7.50	7.50	7.50	7.50	7.50	7.50	7.50	7.50	7.59	7.59	7.59
	Efficiency %	58.0	63.5	64.0	63.7	67.1	69.6	70.8	72.3	73.5	76.0	75.4	76.6	79.5	80.6	81.7
100	Mech. Input HP	0.069	0.103	0.203	0.358	0.448	0.778	1.26	1.86	2.65	3.31	4.89	7.82	10.7	17.0	25.7
	Out.Torq., in.lbs.	916	1510	3110	5170	6910	12400	20500	31200	44800	58400	84400	138000	193000	311000	477000
	Therm. Input HP	0.069	0.103	0.203	0.358	0.448	0.778	1.26	1.86	2.65	3.31	4.89	7.82	10.7	17.0	25.7
	Output RPM	2.50	2.50	2.50	2.50	2.50	2.50	2.50	2.50	2.50	2.50	2.50	2.50	2.53	2.53	2.53
	Efficiency %	52.7	58.2	60.8	57.3	61.2	63.2	64.5	66.5	67.1	70.0	68.5	70.0	72.5	73.5	74.6

Ratings based on 1.0 service factor. For A.G.M.A. recommended practice on service factors, see page 11.

Horsepower and Torque Ratings • Single Reduction

Nominal Ratio 50:1

WORM SPEED (RPM)	Unit Size	20	25	30	35	40	50	60	70	80	90	100	120	140	170	200
	Center Distance	2	2.5	3	3.5	4	5	6	7	8	9	10	12	14	17	20
	Total Ratio	50.00	50.00	50.00	50.00	50.00	50.00	50.00	50.00	50.00	50.00	50.00	50.00	50.00	50.00	50.00
	Actual Ratio	**50**	**50**	**50**	**50**	**50**	**50**	**50**	**50**	**50**	**50**	**50**	**50**	**50**	**50**	**50**
1750	Mech. Input HP	0.552	0.797	1.46	2.07	2.65	4.21	6.22	9.30	12.5	16.3	21.0	32.4	43.0	79.1	110
	Out.Torq., in.lbs.	580	978	1870	2660	3550	5800	8720	13200	18000	23800	31000	48600	65100	121000	172000
	Therm. Input HP	0.552	0.797	1.46	2.07	2.65	4.21	6.22	8.78	11.7	15.1	19.0	28.0	43.0	75.0	100
	Output RPM	35	35	35	35	35	35	35	35	35	35	35	35	35	35	35
	Efficiency %	58.4	68.1	71.1	71.4	74.4	76.5	77.9	78.8	80.0	81.1	82.0	83.3	84.1	85.0	86.8
1450	Mech. Input HP	0.462	0.715	1.34	1.92	2.45	3.90	5.73	8.54	11.4	15.0	19.4	30.0	38.4	72.2	104
	Out.Torq., in.lbs.	620	1050	2040	2960	3930	6450	9650	14600	19900	26200	34200	53900	69800	133000	192000
	Therm. Input HP	0.462	0.715	1.34	1.92	2.45	3.90	5.73	8.06	10.7	13.9	17.5	25.9	38.4	67.0	92.0
	Output RPM	29.0	29.0	29.0	29.0	29.0	29.0	29.0	29.0	29.0	29.0	29.0	29.0	29.0	29.0	29.0
	Efficiency %	61.7	67.6	70.1	70.9	73.8	76.1	77.5	78.7	80.3	80.4	81.1	82.7	83.6	84.8	84.9
1150	Mech. Input HP	0.401	0.623	1.19	1.74	2.20	3.56	5.28	7.79	10.3	13.6	17.6	27.3	32.5	64.2	95.0
	Out.Torq., in.lbs.	668	1140	2230	3300	4380	7280	11000	16500	22300	29700	38600	61100	74000	149000	222000
	Therm. Input HP	0.401	0.623	1.19	1.74	2.20	3.56	5.28	7.35	9.67	12.6	15.8	23.6	32.5	57.0	80.0
	Output RPM	23.0	23.0	23.0	23.0	23.0	23.0	23.0	23.0	23.0	23.0	23.0	23.0	23.0	23.0	23.0
	Efficiency %	60.8	66.8	68.4	69.2	72.7	74.6	76.0	77.3	79.0	79.7	80.0	81.7	83.1	84.7	85.3
865	Mech. Input HP	0.328	0.515	0.991	1.50	1.88	3.13	4.71	6.98	9.34	12.0	15.5	24.0	28.8	54.5	78.5
	Out.Torq., in.lbs.	707	1210	2430	3680	4860	8390	12800	19300	26100	34300	44400	70100	86500	160000	242000
	Therm. Input HP	0.328	0.515	0.991	1.50	1.88	3.13	4.71	6.65	8.82	11.3	14.1	20.9	28.8	47.0	66.0
	Output RPM	17.3	17.3	17.3	17.3	17.3	17.3	17.3	17.3	17.3	17.3	17.3	17.3	17.3	17.3	17.3
	Efficiency %	59.2	64.5	67.3	67.3	71.0	73.6	74.6	75.9	76.7	78.5	78.6	80.2	82.4	80.6	84.6
680	Mech. Input HP	0.303	0.435	0.847	1.30	1.62	2.76	4.19	6.30	8.50	11.1	14.3	21.8	25.9	49.5	66.3
	Out.Torq., in.lbs.	735	1270	2560	3940	5200	9130	14200	21600	29600	39300	51200	79600	96400	187000	256000
	Therm. Input HP	0.303	0.435	0.847	1.30	1.62	2.76	4.19	6.00	8.02	10.4	13.0	19.0	25.9	40.0	57.0
	Output RPM	13.6	13.6	13.6	13.6	13.6	13.6	13.6	13.6	13.6	13.6	13.6	13.6	13.6	13.6	13.6
	Efficiency %	52.3	63.0	65.2	65.4	69.3	71.4	73.1	74.0	75.1	76.4	77.3	78.8	80.3	81.5	83.3
575	Mech. Input HP	0.240	0.381	0.749	1.17	1.35	2.49	3.83	5.75	7.82	10.2	13.1	19.9	24.6	45.1	60.0
	Out.Torq., in.lbs.	750	1300	2640	4100	5400	9560	15100	23000	31500	42400	55000	84700	106000	199000	271000
	Therm. Input HP	0.240	0.381	0.749	1.17	1.35	2.49	3.83	5.53	7.45	9.71	12.2	18.1	24.6	33.0	50.0
	Output RPM	11.5	11.5	11.5	11.5	11.5	11.5	11.5	11.5	11.5	11.5	11.5	11.5	11.5	11.5	11.5
	Efficiency %	57.0	62.3	64.3	63.9	73.0	70.1	71.9	73.0	73.5	75.8	76.6	77.7	78.6	80.5	82.4
450	Mech. Input HP	0.197	0.313	0.624	0.986	1.22	2.11	3.29	5.00	6.84	9.12	11.8	18.0	22.5	37.1	49.0
	Out.Torq., in.lbs.	765	1340	2730	4290	5640	10100	16100	24900	34800	46900	61800	95900	122000	206000	278000
	Therm. Input HP	0.197	0.313	0.624	0.986	1.22	2.11	3.29	4.81	6.52	8.61	9.75	16.4	22.5	28.0	45.0
	Output RPM	9.0	9.0	9.0	9.0	9.0	9.0	9.0	9.0	9.0	9.0	9.0	9.0	9.0	9.0	9.0
	Efficiency %	55.5	61.1	62.5	62.1	66.0	68.4	69.9	71.1	72.7	73.4	74.8	76.1	77.4	79.3	81.0
300	Mech. Input HP	0.140	0.225	0.449	0.718	0.883	1.56	2.47	3.75	5.22	7.03	9.33	14.3	18.7	29.0	41.1
	Out.Torq., in.lbs.	787	1390	2860	4520	5930	10700	17100	26800	38000	51100	69700	111000	147000	232000	330000
	Therm. Input HP	0.140	0.225	0.449	0.718	0.883	1.56	2.47	3.68	5.07	6.65	7.53	13.3	18.7	22.0	40.0
	Output RPM	6.0	6.0	6.0	6.0	6.0	6.0	6.0	6.0	6.0	6.0	6.0	6.0	6.0	6.0	6.0
	Efficiency %	53.5	58.8	60.6	59.9	63.9	65.3	65.9	68.0	69.3	69.2	71.1	73.9	74.8	76.2	76.4
100	Mech. Input HP	0.054	0.087	0.173	0.287	0.345	0.626	1.01	1.56	2.20	3.03	4.04	6.52	8.86	14.5	20.5
	Out.Torq., in.lbs.	825	1450	3010	4820	6300	11700	19200	30000	43100	60800	80900	133000	186000	310000	454000
	Therm. Input HP	0.054	0.087	0.173	0.287	0.345	0.626	1.01	1.56	2.20	3.03	4.04	6.52	8.86	14.5	20.5
	Output RPM	2.00	2.00	2.00	2.00	2.00	2.00	2.00	2.00	2.00	2.00	2.00	2.00	2.00	2.00	2.00
	Efficiency %	48.5	52.9	55.2	53.3	57.9	59.3	60.3	61.0	62.2	63.7	63.5	64.7	66.6	67.8	70.3

Nominal Ratio 60:1

WORM SPEED (RPM)	Unit Size	20	25	30	35	40	50	60	70	80	90	100	120	140	170	200
	Center Distance	2	2.5	3	3.5	4	5	6	7	8	9	10	12	14	17	20
	Total Ratio	60.00	60.00	60.00	60.00	60.00	60.00	60.00	60.00	60.00	60.00	60.00	60.00	60.00	60.00	60.00
	Actual Ratio	**60**	**60**	**60**	**60**	**60**	**60**	**60**	**60**	**60**	**60**	**60**	**60**	**60**	**60**	**60**
1750	Mech. Input HP	0.434	0.668	1.19	1.68	2.12	3.40	5.03	7.47	10.2	13.1	16.9	26.2	35.2	63.3	88.6
	Out.Torq., in.lbs.	550	929	1750	2450	3310	5440	8210	12400	17200	22400	29300	42,800	62100	113000	161000
	Therm. Input HP	0.434	0.668	1.19	1.68	2.12	3.40	5.03	7.05	9.55	12.2	15.3	22.6	35.2	63.3	87.0
	Output RPM	29.2	29.2	29.2	29.2	29.2	29.2	29.2	29.2	29.2	29.2	29.2	29.2	29.2	29.2	29.2
	Efficiency %	58.6	64.4	68.1	67.5	72.3	74.0	75.5	76.8	78.0	79.1	80.2	80.7	81.6	82.6	84.1
1450	Mech. Input HP	0.385	0.601	1.09	1.60	1.94	3.19	4.64	6.84	9.37	12.3	14.9	24.2	31.2	58.3	79.9
	Out.Torq., in.lbs.	586	1000	1910	2800	3630	6100	9080	13600	18900	25000	30900	50800	66200	125000	175000
	Therm. Input HP	0.385	0.601	1.09	1.60	1.94	3.19	4.64	6.46	8.76	11.4	13.5	20.9	31.2	58.3	79.9
	Output RPM	24.2	24.2	24.2	24.2	24.2	24.2	24.2	24.2	24.2	24.2	24.2	24.2	24.2	24.2	24.2
	Efficiency %	58.4	63.8	67.2	67.1	71.7	73.3	75.0	76.2	77.3	77.9	79.5	80.5	81.4	82.2	84.0
1150	Mech. Input HP	0.330	0.525	0.943	1.44	1.73	2.90	4.30	6.34	8.50	10.9	14.2	21.9	26.5	51.5	70.2
	Out.Torq., in.lbs.	622	1080	2070	3130	4010	6870	10500	15500	21400	27700	36400	57100	70100	139000	192000
	Therm. Input HP	0.330	0.525	0.943	1.44	1.73	2.90	4.30	5.99	7.95	10.1	12.8	18.9	26.5	51.5	70.2
	Output RPM	19.2	19.2	19.2	19.2	19.2	19.2	19.2	19.2	19.2	19.2	19.2	19.2	19.2	19.2	19.2
	Efficiency %	57.3	62.6	66.8	66.1	70.5	72.0	74.3	74.3	76.6	77.3	78.0	79.3	804	82.1	83.2
865	Mech. Input HP	0.271	0.435	0.799	1.25	1.48	2.52	3.82	5.64	7.68	9.82	13.0	19.3	24.2	46.1	58.3
	Out.Torq., in.lbs.	660	1160	2230	3480	4420	7800	12000	18100	25100	32400	43300	65800	84400	161000	210000
	Therm. Input HP	0.271	0.435	0.799	1.25	1.48	2.52	3.82	5.38	7.25	9.18	11.3	16.8	24.2	46.1	58.3
	Output RPM	14.4	14.4	14.4	14.4	14.4	14.4	14.4	14.4	14.4	14.4	14.4	14.4	14.4	14.4	14.4
	Efficiency %	55.7	61.0	63.8	63.7	68.3	70.8	71.9	73.4	74.8	75.5	76.2	78.0	79.8	79.9	82.4
680	Mech. Input HP	0.226	0.368	0.663	1.09	1.26	2.16	3.36	5.07	6.97	8.89	11.6	17.8	21.3	38.6	49.9
	Out.Torq., in.lbs.	686	1210	2290	3730	4700	8440	13200	20200	28300	36400	48600	75400	91600	169000	222000
	Therm. Input HP	0.226	0.368	0.663	1.09	1.26	2.16	3.36	4.83	6.58	8.31	9.59	15.5	21.3	35.0	49.9
	Output RPM	11.3	11.3	11.3	11.3	11.3	11.3	11.3	11.3	11.3	11.3	11.3	11.3	11.3	11.3	11.3
	Efficiency %	54.6	59.1	62.1	61.5	67.1	70.3	70.6	71.6	73.0	73.6	75.3	76.2	77.3	78.7	80.0
575	Mech. Input HP	0.197	0.323	0.599	0.973	1.13	1.99	3.07	4.58	6.38	8.32	10.7	16.0	20.2	35.2	46.0
	Out.Torq., in.lbs.	698	1240	2410	3850	4860	8810	14000	21300	30100	39700	51800	79600	101000	179000	240000
	Therm. Input HP	0.197	0.323	0.599	0.973	1.13	1.99	3.07	4.41	6.08	7.66	8.55	13.9	20.2	30.0	45.0
	Output RPM	9.58	9.58	9.58	9.58	9.58	9.58	9.58	9.58	9.58	9.58	9.58	9.58	9.58	9.58	9.58
	Efficiency %	53.9	58.4	61.2	60.2	65.4	67.3	69.3	70.7	71.7	72.6	73.6	75.6	76.0	77.3	79.3
450	Mech. Input HP	0.162	0.265	0.495	0.826	0.941	1.69	2.63	4.00	5.59	7.32	9.57	14.6	18.6	31.1	41.2
	Out.Torq., in.lbs.	715	1270	2490	4040	5050	9250	14800	22900	32800	43600	57700	89900	116000	199000	269000
	Therm. Input HP	0.162	0.265	0.495	0.826	0.941	1.69	2.63	3.85	5.33	6.49	7.19	11.8	18.6	25.0	40.0
	Output RPM	7.50	7.50	7.50	7.50	7.50	7.50	7.50	7.50	7.50	7.50	7.50	7.50	7.50	7.50	7.50
	Efficiency %	52.5	57.0	59.9	58.2	63.9	65.1	67.0	68.1	69.8	70.9	71.7	73.3	74.2	76.1	77.7
300	Mech. Input HP	0.116	0.191	0.359	0.604	0.680	1.24	1.98	2.99	4.25	5.64	7.42	11.6	15.6	23.8	33.4
	Out.Torq., in.lbs.	734	1310	2590	4250	5280	9840	16000	25000	35500	47900	64200	103000	141000	220000	315000
	Therm. Input HP	0.116	0.191	0.359	0.604	0.680	1.24	1.98	2.94	4.13	5.01	5.56	9.09	15.6	15.0	32.0
	Output RPM	5.00	5.00	5.00	5.00	5.00	5.00	5.00	5.00	5.00	5.00	5.00	5.00	5.00	5.00	5.00
	Efficiency %	50.2	54.4	57.2	55.8	61.6	63.0	64.1	66.3	66.3	67.4	68.6	70.4	71.7	73.3	74.8
100	Mech. Input HP	0.044	0.075	0.143	0.243	0.266	0.501	0.806	1.24	1.77	2.42	3.24	5.20	7.36	12.1	17.4
	Out.Torq., in.lbs.	753	1380	2710	4540	5600	10600	17600	27400	40000	54800	74100	122000	176000	293000	435000
	Therm. Input HP	0.044	0.075	0.143	0.243	0.266	0.501	0.806	1.24	1.77	2.42	3.24	5.20	7.36	12.0	17.4
	Output RPM	1.67	1.67	1.67	1.67	1.67	1.67	1.67	1.67	1.67	1.67	1.67	1.67	1.67	1.67	1.67
	Efficiency %	45.3	48.7	50.1	49.4	55.7	56.0	57.7	58.4	59.8	59.9	60.5	62.0	63.2	64.0	66.1

Ratings based on 1.0 service factor. For A.G.M.A. recommended practice on service factors, see page 11.

Horsepower and Torque Ratings • Single Reduction

Nominal Ratio 70:1

WORM SPEED (RPM)	Unit Size	20	25	30	35	40	50	60	70	80	90	100	120	140	170	200
	Center Distance	2	2.5	3	3.5	4	5	6	7	8	9	10	12	14	17	20
	Total Ratio	70.00	70.00	70.00	70.00	70.00	70.00	70.00	70.00	70.00	70.00	70.00	70.00	70.00	70.00	70.00
	Actual Ratio	**70**	**70**	**70**	**70**	**70**	**70**	**70**	**70**	**70**	**70**	**70**	**70**	**70**	**70**	**70**
1750	Mech. Input HP	0 348	0.551	1.02	1.43	1.82	2.85	4.27	6.34	8.95	11.0	14.3	21.3	28.1	47.5	69.6
	Out.Torq., in.lbs.	500	849	1640	2330	3100	5000	7720	11700	16500	20900	27400	41800	55500	95000	142000
	Therm. Input HP	0.348	0.551	1.02	1.43	1.82	2.85	4.27	5.99	8.37	10.2	12.9	18.4	28.1	47.5	69.6
	Output RPM	25.0	25.0	25.0	25.0	25.0	25.0	25.0	25.0	25.0	25.0	25.0	25.0	25.0	25.0	25.0
	Efficiency %	57.0	61.1	63.8	64.6	67.6	69.6	71.7	73.2	73.1	75.4	76.0	77.8	78.3	79.3	80.9
1450	Mech. Input HP	0.318	0.494	0.926	1.32	1.68	2.65	3.94	5.83	7.82	10.1	13.0	19.8	25.5	42.5	63.0
	Out.Torq., in.lbs.	533	912	1790	2580	3440	5600	8520	12900	17500	23000	30100	46600	60400	102000	155000
	Therm. Input HP	0.318	0.494	0.926	1.32	1.68	2.65	3.94	5.50	7.31	9.39	11.8	17.1	25.5	42.5	63.0
	Output RPM	20 7	20.7	20.7	20.7	20.7	20.7	20.7	20.7	20.7	20.7	20.7	20.7	20.7	20.7	20.7
	Efficiency %	55.1	60.7	63.5	64.2	67.3	69.5	71.1	72.7	73.6	74.8	76.1	77.4	77.8	78.9	80.9
1150	Mech. Input HP	0.269	0.431	0.821	1.20	1.53	2.44	3.66	5.33	7.08	9.23	11.9	17.9	22.1	37.0	56.0
	Out.Torq., in.lbs.	565	982	1960	2880	3860	6350	9780	14600	19600	26000	34000	52500	65600	111000	171000
	Therm. Input HP	0.269	0.431	0.821	1.20	1.53	2.44	3.66	5.03	6.62	8.55	10.8	15.5	22.1	37.0	56.0
	Output RPM	16.4	16.4	16.4	16.4	16.4	16.4	16.4	16.4	16.4	16.4	16.4	16.4	16.4	16.4	16.4
	Efficiency %	54.7	59.4	62.2	62.6	65.8	67.8	69.7	71.4	72.2	73.4	74.5	76.5	77.4	78.2	79.6
865	Mech. Input HP	0.222	0.357	0.702	1.04	1.32	2.16	3.29	4.84	6.40	8.22	10.5	15.8	19.8	34.6	48.3
	Out.Torq., in.lbs.	597	1050	2130	3190	4280	7270	11400	17100	23000	30000	39000	60100	76000	135000	193000
	Therm. Input HP	0.222	0.357	0. 702	1.04	1.32	2.16	3.29	4.61	6.04	7.69	8.94	13.8	19.8	34.6	48.3
	Output RPM	12.4	12.4	12.4	12.4	12.4	12.4	12.4	12.4	12.4	12.4	12.4	12.4	12.4	12.4	12.4
	Efficiency%	52.7	57.7	59.5	60.1	63.6	66.0	67.9	69.3	70.5	71.6	72.8	74.6	75.3	76.5	78.3
680	Mech. Input HP	0.185	0.302	0.596	0.906	1.15	1.91	2.95	4.38	5.88	7.65	9.81	14.6	18.1	31.4	41.6
	Out.Torq., in.lbs.	620	1100	2250	3420	4590	7920	12600	19200	26100	34600	44900	68400	83300	148000	208000
	Therm. Input HP	0.185	0.302	0.596	0.906	1.15	1.91	2.95	4.18	5.55	6.90	7.60	12.7	18.1	31.4	41.6
	Output RPM	9.71	9.71	9.71	9.71	9.71	9.71	9.71	9.71	9.71	9.71	9.71	9.71	9.71	9.71	9.71
	Efficiency %	51.7	56.1	58.2	58.2	61.5	63.9	65.8	67.6	68.4	69.7	70.5	72.2	70.9	72.6	77.1
575	Mech. Input HP	0.162	0.266	0.534	0.806	1.03	1.74	2.71	4.02	5.39	7.12	9.10	13.4	17.0	27.3	38.1
	Out.Torq., in.lbs.	630	1120	2320	3550	4760	8330	13400	20300	28100	37300	48400	72600	94400	155000	222000
	Therm. Input HP	0.162	0.266	0.534	0.806	1.03	1.74	2. 71	3.87	5.19	6.11	6.76	11.5	17.0	27.0	38.1
	Output RPM	8.21	8.21	8.21	8.21	8.21	8.21	8.21	8.21	8.21	8.21	8.21	8.21	8.21	8.21	8.21
	Efficiency %	50.7	54.9	56.6	57.4	60.2	62.4	64.4	65.8	67.9	68.3	69.3	70.6	72.4	74.0	75.9
450	Mech. Input HP	0.138	0.219	0.450	0.693	0.870	1.49	2.35	3.53	4.81	6.37	8.26	12.3	15.8	24.4	33.8
	Out.Torq., in.lbs.	644	1150	2400	3720	4960	8800	14300	22100	30800	41300	57200	83000	109000	165000	245000
	Therm. Input HP	0.138	0.219	0.450	0.693	0.870	1.49	2.35	3.40	4.59	5.18	5.70	9.69	15.8	23.0	33.8
	Output RPM	6.43	6.43	6.43	6.43	6.43	6.43	6.43	6.43	6.43	6.43	6.43	6.43	6.43	6.43	6.43
	Efficiency %	47.6	53.6	54.4	54.8	58.2	60.2	62.1	63.9	65.3	66.1	70.6	68.8	70.4	69.0	73.9
300	Mech. Input HP	0.094	0.158	0.327	0.508	0.639	1.12	1.80	2.68	3.73	5.02	6.60	9.94	13.4	20.5	28.3
	Out.Torq., in.lbs.	650	1190	2500	3910	5240	9410	15500	23800	33700	46100	61500	95900	132000	206000	296000
	Therm. Input HP	0.094	0.158	0.327	0.508	0.639	1.12	1.80	2.63	3.63	4.00	4.41	7.47	13.4	17.0	28.3
	Output RPM	4.29	4.29	4.29	4.29	4.29	4.29	4.29	4.29	4.29	4.29	4.29	4.29	4.29	4.29	4.29
	Efficiency %	47.0	51.2	52.0	52.3	55.8	57.1	58.6	60.4	61.4	62.4	63.4	65.6	67.0	68.3	71.1
100	Mech. Input HP	0.036	0.062	0.132	0.206	0.258	0.465	0.749	1.15	1.62	2.22	2.95	4.63	6.69	11.1	15.8
	Out.Torq., in.lbs.	688	1250	2640	4170	5600	10300	17200	26900	38400	53500	71800	116000	170000	284000	421000
	Therm. Input HP	0.036	0.062	0.132	0.206	0.258	0.465	0.749	1.15	1.62	2.22	2.95	4.63	6.69	11.1	15.8
	Output RPM	1.43	1.43	1.43	1.43	1.43	1.43	1.43	1.43	1.43	1.43	1.43	1.43	1.43	1.43	1.43
	Efficiency %	43.3	45.7	45.3	45.9	49.2	50.2	52.1	53.0	53.7	54.6	55.2	56.8	57.6	58.0	60.4

Ratings based on 1.0 service factor. For A.G.M.A. recommended practice on service factors, see page 11.

Dimensions Type E • Horizontal and Vertical

Horizontal Assemblies

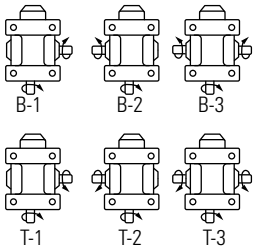

Vertical Assemblies

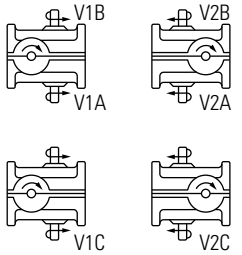

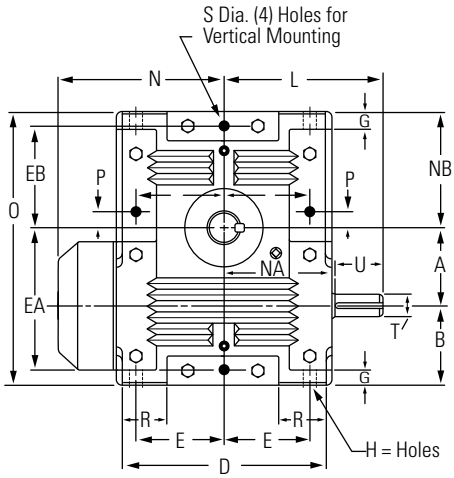

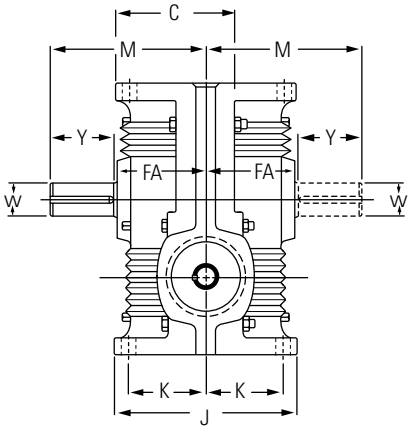

Additional horizontal assemblies for Type E on page 30

Unit Size	Weight Pounds	A	B	C	D	E	EA	EB	FA	G	H	J	K	L	M	N	NA	NB	O	P	Q	R	S	T▲	U	Keyway	WA	Y	Keyway
E20	35	2	2 5/8	2 5/8	6 1/8	2 5/8	4 1/4	2 5/8	2 1/16	1/2	7/16	4 1/8	1 5/8	4 1/2	4	5 1/4	3 1/4	3	7 5/8	13/16	2 5/8	1 3/16	7/16	11/16	1 5/16	3/16 x 3/32 x 1 1/4	1	1 15/16	1/4 x 1/8 x 1 7/8
E25	48	2 1/2	2 1/2	3 7/8	6 3/4	2 7/8	4 9/16	3 5/16	3	1/2	1/2	6	2 1/2	5 3/8	5 3/8	5 5/8	3 5/8	3 3/4	8 3/4	3/4	2 7/8	1 7/16	7/16	11/16	1 3/4	3/16 x 3/32 x 1 11/16	1 1/8	2 1/4	1/4 x 1/8 x 2 1/8
E30	64	3	3	4 9/16	7 7/8	3 3/8	5 1/2	4	3 9/16	5/8	9/16	7 1/8	3	6 1/8	6	6 7/16	4 1/8	4 1/2	10 1/2	1	3 3/8	1 3/4	7/16	7/8	1 7/8	3/16 x 3/32 x 1 13/16	1 1/4	2 7/16	1/4 x 1/8 x 2 3/8
E35	95	3 1/2	3 3/8	5 5/16	9	3 7/8	6 3/8	4 7/8	4 1/8	7/8	11/16	8 1/4	3 3/8	7	7 1/8	7 1/16	4 3/4	5 3/8	12 1/4	1 1/4	3 7/8	2	9/16	1	2	1/4 x 1/8 x 1 15/16	1 1/2	3	3/8 x 3/16 x 2 15/16
E40	160	4	4 1/4	6 5/16	10 1/4	4 1/4	7 1/2	5 1/4	5	7/8	13/16	10	4	7 3/4	8 1/2	8 1/16	5 1/2	6	14 1/4	1 3/4	4 1/4	2 3/8	11/16	1 1/8	2 1/16	1/4 x 1/8 x 2	1 3/4	3 1/2	3/8 x 3/16 x 3 7/16

Dimensions Type EB • Horizontal

Assemblies

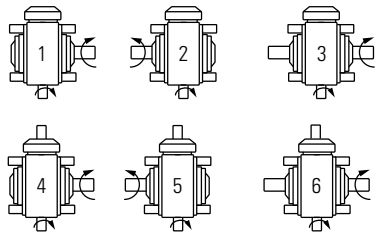

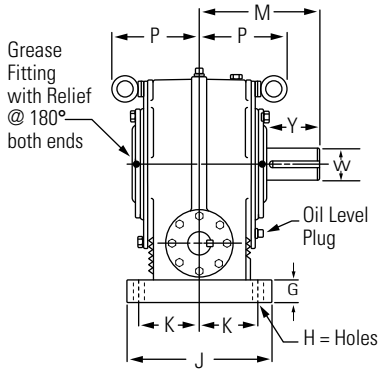

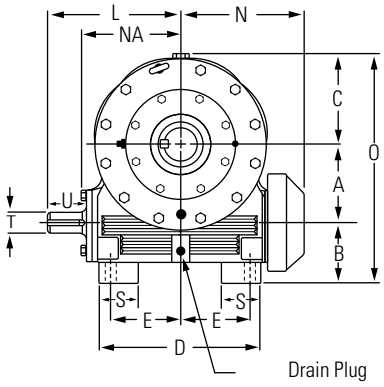

Unit Size	Wt. Lbs.	A	B	C	D	E	G	H	J	K	L	M	N	NA	O	P	S	T▲	U	Keyway	W▲	Y	Keyway
EB170	4100	17	10 1/2	18 1/2	32	13 1/4	3/8	1 11/16	24	10 1/4	24	21 1/2	22 3/4	17 15/16	45 3/4	13 1/4	5 3/4	3 1/4	6 3/16	3/4 x 3/8 x 6 1/8	5 3/4	10	1 1/2 x 3/4 x 9 3/4
EB200	5700	20	11 1/2	21 7/16	36	14 3/4	3 5/8	1 15/16	27	11 1/2	27 3/8	23 3/4	26	20 3/16	52 3/4	14 1/2	6 1/2	3 1/2	7	7/8 x 7/16 x 6 15/16	6 1/2	11	1 1/2 x 3/4 x 10 1/2

All dimensions are in inches. Use certified prints for construction. The input shaft may be rotated in either direction. Standard gear sets are cut with right hand threads giving relative shaft rotations as shown above. Shaft arrangements are shown above. Desired assembly should be specified when ordering. Standard keys are furnished with units.

▲ Tolerances: 1 1/2" Diameter or Less = +.0000" -.0005"
Over 1 1/2" Diameter = +.000" -.001"
Low input speeds require special order instructions. See introductory section.

Dimensions Type E • Horizontal

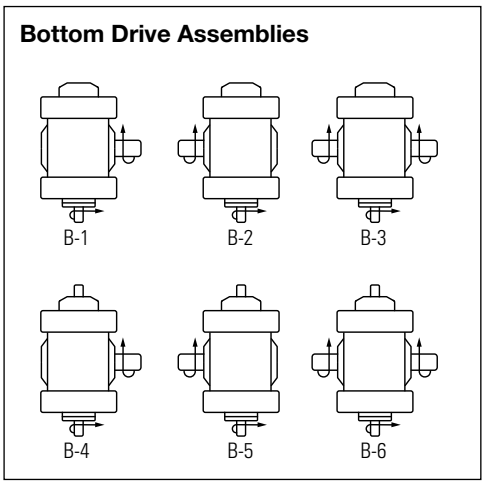

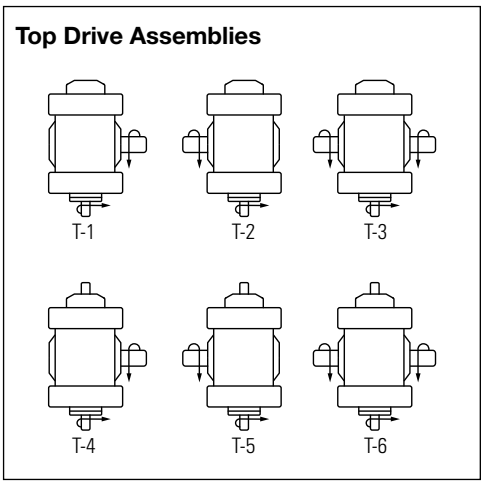

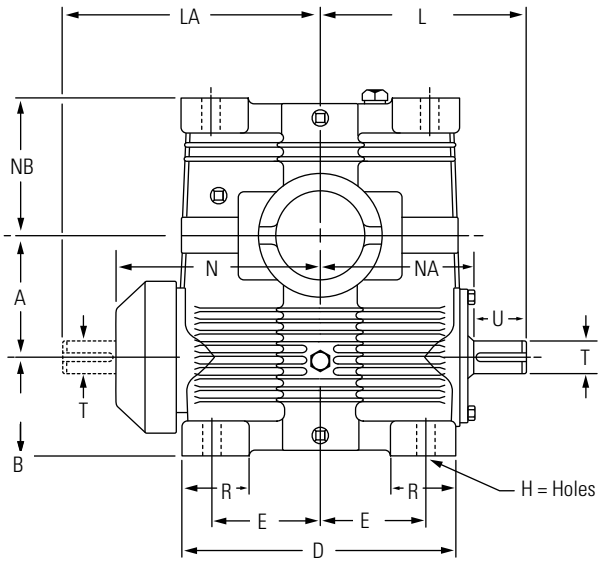

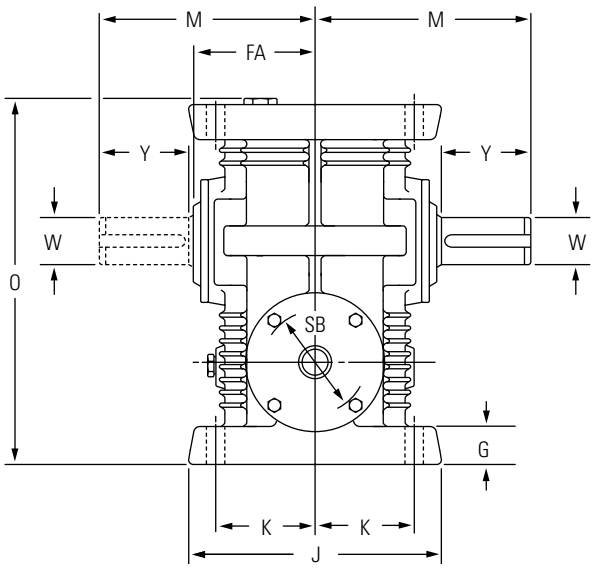

Unit Size	WT LBS.	A	B	D	E	FA	G	H	J	K	L	LA	M	N	NA	NB	O	R	SB	T▲	U	Keyway	W▲	Y	Keyway
E50	175	5	4 5/8	11 3/8	4 3/4	5 1/2	1 1/2	13/16	10 3/4	4 3/8	8 3/4	10 15/16	9 5/8	8 9/16	6 7/16	5 3/4	15 7/8	2	4 7/16	1 3/8	2 5/16	5/16 x 5/32 x 2 1/4	2	4	1/2 x 1/4 x 3 7/8
E60	285	6	5	13 1/2	5 1/4	6 1/8	1 11/16	15/16	12 1/4	4 3/4	10 1/4	12 5/8	10 3/4	10 1/16	7 3/4	6 3/4	18 1/2	3	5	1 1/2	2 11/16	3/8 x 3/16 x 2 5/8	2 1/4	4 1/2	1/2 x 1/4 x 4 3/8
E70	365	7	5 3/8	14 3/4	6	6 3/8	1 11/16	1 1/16	13	5	11 1/2	13 7/8	11 1/2	10 3/4	8 3/8	7 3/4	20 5/8	2 3/4	5	1 5/8	3 1/8	3/8 x 3/16 x 3 1/16	2 1/2	5	5/8 x 5/16 x 4 15/16
E80	520	8	5 3/4	16 1/2	6 3/4	6 1/2	1 3/4	1 3/16	13 1/2	5 3/8	12 1/2	15 1/2	12 1/8	11 3/4	9 3/8	8 3/4	23	3	5 1/8	1 7/8	3 1/8	1/2 x 1/4 x 3 1/16	2 3/4	5 1/2	5/8 x 5/16 x 5 7/16
E90	725	9	6 1/4	18 3/4	7 3/4	7 5/8	1 7/8	1 7/16	15 1/4	6	14 1/4	17 3/4	14 1/4	13 7/8	10 3/8	9 3/4	25 1/2	3 1/4	5 7/8	2 1/8	3 15/16	1/2 x 1/4 x 3 7/8	3 1/4	6 1/2	3/4 x 3/8 x 6 3/8
E100	980	10	6 3/4	21	8 3/4	8 5/8	2	1 7/16	17	6 3/8	15 1/2	18 13/16	16	15 1/8	11 11/16	10 3/4	27 7/8	3 1/2	5 7/8	2 1/4	4	1/2 x 1/4 x 3 15/16	3 5/8	7 1/4	7/8 x 7/16 x 7 3/16
E120	1370	12	7 1/2	24 5/8	10 1/2	8 7/8	2 1/8	1 9/16	18 1/2	7 1/8	18	21 9/16	17 1/2	17 1/16	13 7/16	13 1/4	33	4	6 7/8	2 1/2	4 9/16	5/8 x 5/16 x 4 1/2	4 1/4	8 1/2	1 x 1/2 x 8 3/8
E140	2200	14	9 1/2	27 1/2	11 1/2	10 1/8	2 1/4	1 11/16	21 3/4	8 3/4	21	26 3/8	19 1/4	20 11/16	15 1/2	15 3/8	39	4 1/2	9 3/16	3	5 1/2	3/4 x 3/8 x 5 5/8	5	9	1 1/4 x 5/8 x 8 5/8

All dimensions are in inches. Use certified prints for construction. The input shaft may be rotated in either direction. Standard gear sets are cut with right hand threads giving relative shaft rotations as shown above. Shaft arrangements are shown above. Desired assembly should be specified when ordering. Standard keys are furnished with units.

▲ Tolerances: 1 1/2" Diameter or Less = +.0000" -.0005"
Over 1 1/2" Diameter = +.000" -.001"
Low input speeds require special order instructions. See introductory section.

Dimensions for "Sugar Scoop" Motor Mounts for Type EK

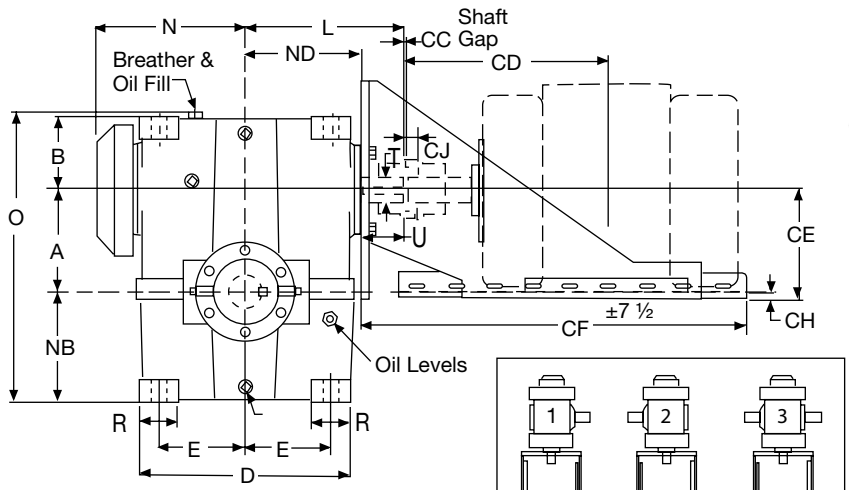

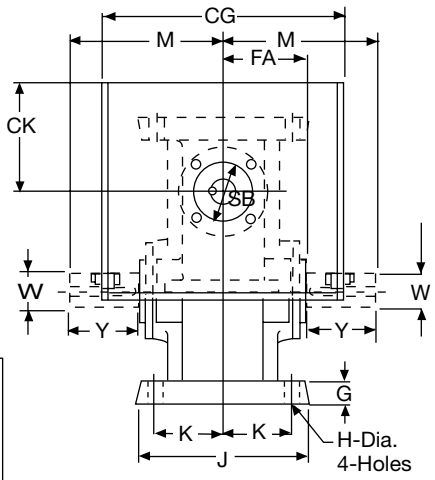

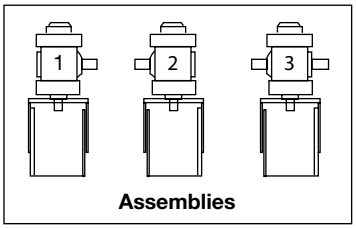

Motor Frame Size	CJ												
	20	25	30	35	40	50	60	70	80	90	100	120	140
56T	3/8	3/8	3/8	3/8	5/8	5/8							
143T	3/8	3/8	3/8	3/8	5/8	5/8							
145T	3/8	3/8	3/8	3/8	5/8	5/8							
182T		3/8	5/8	5/8	5/8	5/8	5/8	3/4	7/8				
184T			5/8	5/8	5/8	5/8	5/8	3/4	7/8				
213T			5/8	5/8	5/8	3/4	5/8	3/4	7/8	1 5/16			
215T			5/8	5/8	5/8	3/4	5/8	3/4	7/8	1 5/16	1 5/16		
254T						7/8	7/8	7/8	7/8	1 5/16	1 5/16	1 1/4	
256T						7/8	7/8	7/8	7/8	1 5/16	1 5/16	1 1/4	
284T							7/8	7/8	7/8	1 5/16	1 5/16	1 1/4	2 1/8
286T							7/8	7/8	7/8	1 5/16	1 5/16	1 1/4	2 1/8
324T								1 5/16	1 5/16	1 5/16	1 5/16	1 1/4	2 1/8
326T								1 5/16	1 5/16	1 5/16	1 5/16	1 1/4	2 1/8
364T									1 5/16	1 5/16	1 5/16	1 1/4	2 1/8
365T										1 5/16	1 5/16	1 1/4	2 1/8
404T											1 7/8	1 7/8	2 1/8
405T												1 7/8	2 1/8

Motor Frame Size	CF						
	CC	CD	CE	±7 ½	CG	CH	CK
56T	1/8	6 1/8	4 7/8	25	12 5/8	3/16	4 7/8
143T	1/8	6 1/2	4 7/8	25	12 5/8	3/16	4 7/8
145T	1/8	7	4 7/8	25	12 5/8	3/16	4 7/8
182T	1/8	7 3/4	4 7/8	25	12 5/8	3/16	4 7/8
184T	1/8	8 1/4	4 7/8	25	12 5/8	3/16	4 7/8
213T	1/8	9 5/8	5 9/16	28	12 3/4	1/4	5
215T	1/8	10 3/8	5 9/16	28	12 3/4	1/4	5
254T	1/8	12 3/8	6 5/8	31	15	15/16	6 5/8
256T	1/8	13 1/4	6 5/8	31	15	15/16	6 5/8
284T	1/8	14 1/8	7 5/8	31	17	15/16	7 5/8
286T	1/8	14 7/8	7 5/8	31	17	15/16	7 5/8
324T	1/8	15 3/4	8 1/2	35 1/4	19 1/16	3/8	8 1/2
326T	1/8	16 1/2	8 1/2	35 1/4	19 1/16	3/8	8 1/2
364T	1/8	17 3/8	9 1/2	35 1/4	21 5/16	3/8	9 1/2
365T	1/8	17 7/8	9 1/2	35 1/4	21 5/16	3/8	9 1/2
404T	1/8	20	10 1/2	35 1/4	23 5/16	3/8	10 1/2
405T	1/8	20 3/4	10 1/2	35 1/4	23 5/16	3/8	10 1/2

Unit Size	A	B	D	E	FA	G	H	J	K	L	M	N	NB	ND	O	R	SB	T▲	U	Keyway	W▲	Y	Keyway
EK-20	2	2 5/8	6 1/8	2 5/8	2 1/16	1/2	7/16	4 1/18	1 5/8	4 1/2	4	5 1/4	3	3 1/4	7 5/8	1 3/16	–	11/16	1 5/16	3/16 x 3/32 x 1 1/4	1	1 15/16	1/4 x 1/8 x 1 7/8
EK-25	2 1/2	2 1/2	6 3/4	2 7/8	3	1/2	1/2	6	2 1/2	5 3/8	5 3/8	5 1/8	3 3/4	3 5/8	8 3/4	1 7/16	–	11/16	1 3/4	3/16 x 3/32 x 1 11/16	1 1/8	2 1/4	1/4 x 1/8 x 2 1/8
EK-30	3	3	7 7/8	3 3/8	3 9/16	5/8	9/16	7 1/8	3	6 1/8	6	6 7/16	4 1/2	4 1/8	10 1/2	1 3/4	–	7/8	1 7/8	3/16 x 3/32 x 1 13/16	1 1/4	2 7/16	1/4 x 1/8 x 2 3/8
EK-35	3 1/2	3 3/8	9	3 7/8	4 1/8	7/8	11/16	8 1/4	3 3/8	7	7 1/8	7 1/16	5 3/8	4 3/4	12 1/4	2	–	1	2	1/4 x 1/8 x 1 15/16	1 1/2	3	3/8 x 3/16 x 2 15/16
EK-40	4	4 1/4	10 1/4	4 1/4	5	7/8	13/16	10	4	7 3/4	8 1/2	8 1/16	6	5 1/2	14 1/4	2 3/8	–	1 1/8	2 1/16	1/4 x 1/8 x 2	1 3/4	3 1/2	3/8 x 3/16 x 3 7/16
EK-50	5	4 5/8	11 3/8	4 3/4	5 1/2	1 1/2	13/16	10 3/4	4 3/8	8 3/4	9 5/8	8 5/8	5 3/4	6 3/16	15 7/8	2	4 7/16	1 3/8	2 5/16	5/16 x 5/32 x 2 1/4	2	4	1/2 x 1/4 x 3 7/8
EK-60	6	5	13 1/2	5 1/4	6 1/8	1 11/16	15/16	12 1/4	4 3/4	10 1/4	10 3/4	10 1/16	6 3/4	7 7/16	18 1/2	3	5	1 1/2	2 11/16	3/8 x 3/16 x 2 5/8	2 1/4	4 1/2	1/2 x 1/4 x 4 3/8
EK-70	7	5 3/8	14 3/4	6	6 3/8	1 11/16	1 1/16	13	5	11 1/2	11 1/2	10 3/4	7 3/4	8 1/16	20 5/8	2 3/4	5	1 5/8	3 1/8	3/8 x 3/16 x 3 1/16	2 1/2	5	5/8 x 5/16 x 4 15/16
EK-80	8	5 3/4	16 1/2	6 3/4	6 1/2	1 3/4	1 3/16	13 1/2	5 3/8	12 1/2	12 1/8	11 3/4	8 3/4	9	23	3	5 1/8	1 7/8	3 1/8	1/2 x 1/4 x 3 1/16	2 3/4	5 1/2	5/8 x 5/16 x 5 7/16
EK-90	9	6 1/4	18 3/4	7 3/4	7 5/8	1 7/8	1 7/16	15 1/4	6	14 1/4	14 1/4	13 13/16	9 3/4	10	25 1/2	3 1/4	5 7/8	2 1/8	3 15/16	1/2 x 1/4 x 3 7/8	3 1/4	6 1/2	3/4 x 3/8 x 6 3/8
EK-100	10	6 3/4	21	8 3/4	8 5/8	2	1 7/16	17	6 3/8	15 1/2	16	14 7/8	10 3/4	11 1/4	27 7/8	3 1/2	5 3/4	2 1/4	4	1/2 x 1/4 x 3 15/16	3 5/8	7 1/4	7/8 x 7/16 x 7 3/16
EK-120	12	7 1/2	24 5/8	10 1/2	8 7/8	2 1/8	1 9/16	18 1/2	7 1/8	18	17 1/2	16 5/8	13 1/4	13	33	4	6 7/8	2 1/2	4 9/16	5/8 x 5/16 x 4 1/2	4 1/4	8 1/2	1 x 1/2 x 8 3/8
EK-140	14	9 1/2	27 1/2	11 1/2	10 1/8	2 1/4	1 11/16	21 3/4	8 3/4	21	19 1/4	20 11/16	15 3/8	14 1/2	39	4 1/2	9 3/16	3	5 1/2	3/4 x 3/8 x 5 5/8	5	9	1 1/4 x 5/8 x 8 5/8

All dimensions are in inches. Use certified prints for construction. The input shaft may be rotated in either direction. Standard gear sets are cut with right hand threads giving relative shaft rotations as shown above. Shaft arrangements are shown above. Desired assembly should be specified when ordering. Standard keys are furnished with units.

▲ Tolerances: 1½" Diameter or Less = +.0000" -.0005"
Over 1½" Diameter = +.000" -.001"

Low input speeds require special order instructions. See introductory section.

Dimensions Type V • Vertical

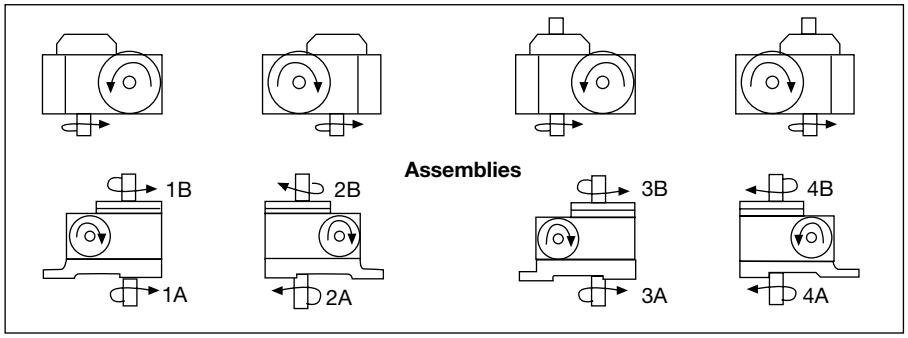

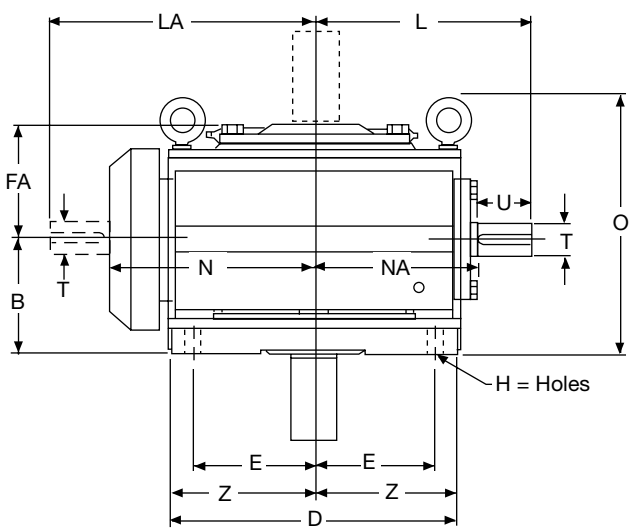

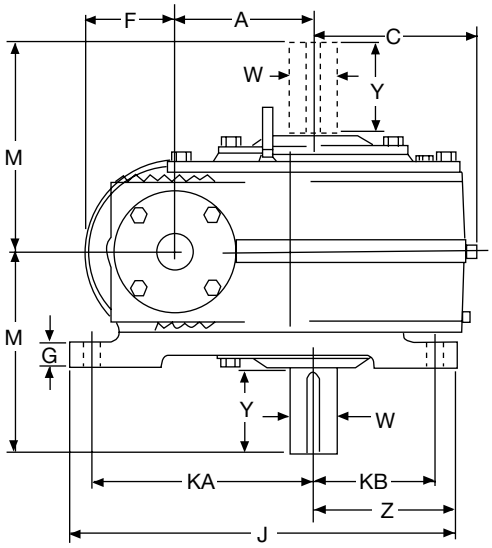

A drywell is standard for vertical assemblies sizes 30-200 only.

Unit Size	Weight Pounds	A	B	C	D	E	F	FA	G	H	J	KA	KB	L	LA	M	N	NA	O	T▲	U	Keyway	W▲	Y	Keyway	Z
V30	70	3	3 1/2	4 1/4	7 1/8	3	2 5/8	3 3/8	3/4	9/16	10 1/8	6	3	6 1/8	7 13/16	6	5 15/16	4 13/16	7 11/16	7/8	1 7/8	3/16 x 3/32 x 1 13/16	1 1/4	2 1/2	1/4 x 1/8 x 2 3/8	3 9/16
V35	100	3 1/2	4 1/8	4 13/16	8 3/8	3 1/2	2 5/8	4	7/8	11/16	11 3/4	6 7/8	3 1/2	7	8 5/8	7 1/8	6 5/8	5	9 1/8	1	2	1/4 x 1/8 x 1 15/16	1 1/2	3	3/8 x 3/16 x 2 15/16	4 3/16
V40	160	4	5	5 3/8	9 1/4	3 7/8	3 1/4	4 7/8	1 1/8	11/16	13 1/8	7 5/8	3 7/8	7 3/4	9 13/16	8 1/2	7 3/4	5 11/16	10 1/2	1 1/8	2 1/16	1/4 x 1/8 x 2	1 3/4	3 1/2	3/8 x 3/16 x 3 7/16	4 5/8
V50	250	5	5 5/8	7 1/2	11 1/8	4 3/4	3 11/16	5 1/2	1 1/4	13/16	15 3/8	9	4 3/4	8 3/4	10 15/16	9 5/8	8 5/8	6 7/16	12 9/16	1 3/8	2 5/16	5/16 x 5/32 x 2 1/4	2	4	1/2 x 1/4 x 3 7/8	5 9/16
V60	350	6	6 1/4	8 5/8	13 3/8	5 3/4	4 1/8	6 1/8	1 3/8	13/16	18 1/8	10 1/2	5 3/4	10 1/4	12 5/8	10 3/4	10 1/16	7 3/4	13 7/16	1 1/2	2 11/16	3/8 x 3/16 x 2 5/8	2 1/4	4 1/2	1/2 x 1/4 x 4 3/8	6 11/16
V70	480	7	6 1/2	9 1/4	14 5/8	6 1/4	5 3/16	6 7/16	1 3/8	15/16	20 1/8	11 3/4	6 1/4	11 1/2	13 7/8	11 1/2	10 3/4	8 3/8	14	1 5/8	3 1/8	3/8 x 3/16 x 3 1/16	2 1/2	5	5/8 x 5/16 x 4 15/16	7 5/16
V80	595	8	6 5/8	10 1/2	16 1/2	7	5 3/16	6 1/2	1 1/2	1 1/16	22 1/4	12 3/4	7	12 1/2	15 1/2	12 1/8	11 3/4	9 3/8	14 7/8	1 7/8	3 1/8	1/2 x 1/4 x 3 1/16	2 3/4	5 1/2	5/8 x 5/16 x 5 15/16	8 1/4
V90	760	9	7 3/4	11 3/8	18 1/2	7 1/8	6 3/16	7 5/8	1 5/8	1 3/16	25	14 3/8	7 7/8	14 1/4	17 3/4	14 1/4	13 13/16	10 3/8	17	2 1/8	3 15/16	1/2 x 1/4 x 3 7/8	3 1/4	6 1/2	3/4 x 3/8 x 6 3/8	9 1/4
V100	960	10	8 3/4	12 5/8	20 3/4	9	6 3/16	8 5/8	1 3/4	1 3/16	27 1/4	15 1/2	9	15 1/2	18 13/16	16	15 1/8	11 11/16	18 1/2	2 1/4	4	1/2 x 1/4 x 3 15/16	3 5/8	7 1/4	7/8 x 7/16 x 7 3/16	10 3/8
V120	1600	12	9	14 5/8	24 1/4	10 3/8	6 3/16	8 7/8	2 1/8	1 5/16	32 3/8	18 1/2	10 3/8	18	21 9/16	17 1/2	17	13 7/16	19 1/2	2 1/2	4 9/16	5/8 x 5/16 x 4 1/2	4 1/4	8 1/2	1 x 1/2 x 8 3/8	12 1/8
V140	2350	14	10 1/4	16 5/8	27 1/2	12	7 11/16	9 7/8	2 1/4	1 5/16	37 1/2	22	12	21	26 3/8	19 1/4	20 11/16	15 1/2	21 3/4	3	5 5/8	3/4 x 3/8 x 5 5/8	5	9	1 1/4 x 5/8 x 8 5/8	13 3/4
V170	3570	17	11 1/2	19 1/2	33	14 1/2	8 3/16	11 1/8	2 1/2	1 9/16	44 3/4	26 1/4	14 1/2	24	29	21 1/2	22 3/4	17 15/16	24 3/4	3 1/4	6 3/16	3/4 x 3/8 x 6 1/8	5 3/4	10	1 1/2 x 3/4 x 9 3/4	16 1/2
V200	4950	20	12 3/4	22 1/2	39	17	10 1/4	12 7/8	2 3/4	1 9/16	53	31	17	27 3/8	33	23 3/4	26	20 3/16	27 1/4	3 1/2	7	7/8 x 7/16 x 16 15/16	6 1/2	11	1 1/2 x 3/4 x 10 1/2	19 1/2

All dimensions are in inches. Use certified prints for construction. The input shaft may be rotated in either direction. Standard gear sets are cut with right hand threads giving relative shaft rotations as shown above. Shaft arrangements are shown above. Desired assembly should be specified when ordering. Standard keys are furnished with units.

▲ Tolerances: 1 1/2" Diameter or Less = +.0000" -.0005"
Over 1 1/2" Diameter = +.000" -.001"

Low input speeds require special order instructions. See introductory section.

Dimensions for "Sugar Scoop" Motor Mounts for Type VK

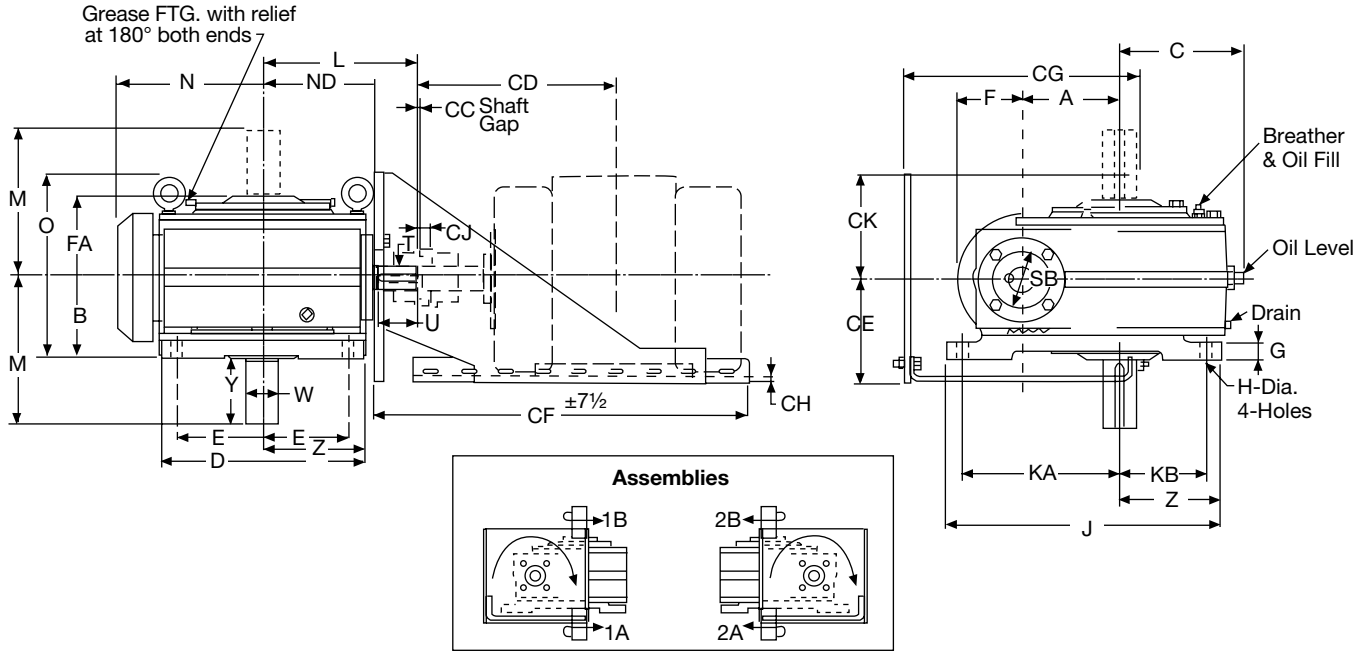

A drywell is standard for vertical assemblies sizes 30-200 only.

Motor Frame Size	CJ												
	30	35	40	50	60	70	80	90	100	120	140	170	200
56T	3/8	3/8	5/8										
143T	3/8	3/8	5/8	5/8									
145T	3/8	3/8	5/8	5/8									
182T	5/8	5/8	5/8	5/8	5/8	3/4	7/8						
184T	5/8	5/8	5/8	5/8	5/8	3/4	7/8						
213T	5/8	5/8	5/8	3/4	5/8	3/4	7/8	1 5/16					
215T	5/8	5/8	5/8	3/4	5/8	3/4	7/8	1 5/16	1 5/16				
254T				7/8	7/8	7/8	7/8	1 5/16	1 5/16	1 1/4			
256T				7/8	7/8	7/8	7/8	1 5/16	1 5/16	1 1/4			
284T					7/8	7/8	7/8	1 5/16	1 5/16	1 1/4	2 1/8		
286T					7/8	7/8	7/8	1 5/16	1 5/16	1 1/4	2 1/8		
324T						1 5/16	1 5/16	1 5/16	1 5/16	1 1/4	2 1/8	2 1/8	
326T						1 5/16	1 5/16	1 5/16	1 5/16	1 1/4	2 1/8	2 1/8	
364T							1 5/16	1 5/16	1 5/16	1 1/4	2 1/8	2 1/8	2 1/8
365T								1 5/16	1 5/16	1 1/4	2 1/8	2 1/8	2 1/8
404T									1 7/8	1 7/8	2 1/8	2 1/8	2 1/8
405T										1 7/8	2 1/8	2 1/8	2 1/8

Motor Frame Size	CF						
	CC	CD	CE	±7½	CG	CH	CK
56T	1/8	6 1/8	4 7/8	25	12 5/8	3/16	4 7/8
143T	1/8	6 1/2	4 7/8	25	12 5/8	3/16	4 7/8
145T	1/8	7	4 7/8	25	12 5/8	3/16	4 7/8
182T	1/8	7 3/4	4 7/8	25	12 5/8	3/16	4 7/8
184T	1/8	8 1/4	4 7/8	25	12 5/8	3/16	4 7/8
213T	1/8	9 5/8	5 9/16	28	12 3/4	1/4	5
215T	1/8	10 3/8	5 9/16	28	12 3/4	1/4	5
254T	1/8	12 3/8	6 5/8	31	15	5/16	6 5/8
256T	1/8	13 1/4	6 5/8	31	15	5/16	6 5/8
284T	1/8	14 1/8	7 5/8	31	17	5/16	7 5/8
286T	1/8	14 7/8	7 5/8	31	17	5/16	7 5/8
324T	1/8	15 3/4	8 1/2	35 1/4	19 1/16	3/8	8 1/2
326T	1/8	16 1/2	8 1/2	35 1/4	19 1/16	3/8	8 1/2
364T	1/8	17 3/8	9 1/2	35 1/4	21 5/16	3/8	9 1/2
365T	1/8	17 7/8	9 1/2	35 1/4	21 5/16	3/8	9 1/2
404T	1/8	20	10 1/2	35 1/4	23 5/16	3/8	10 1/2
405T	1/8	20 3/4	10 1/2	35 1/4	23 5/16	3/8	10 1/2

Unit Size	A	B	C	D	E	F	FA	G	H	J	KA	KB	L	M	N	ND	O	SB	T▲	U	Keyway	W▲	Y	Keyway	Z
VK-30	3	3 1/2	4 1/4	7 1/8	3	2 5/8	3 3/8	3/4	9/16	10 1/8	6	3	6 1/8	6	5 15/16	4	7 11/16	3 1/8	7/8	1 7/8	3/16 x 3/32 x 1 13/16	1 1/4	2 1/2	1/4 x 1/8 x 2 3/8	3 9/16
VK-35	3 1/2	4 1/8	4 13/16	8 3/8	3 1/2	2 5/8	4	7/8	11/16	11 3/4	6 7/8	3 1/2	7	7 1/8	6 5/8	4 3/4	9 1/8	3 3/16	1	2	1/4 x 1/8 x 1 15/15	1 1/2	3	3/8 x 3/16 x 2 15/16	4 3/16
VK-40	4	5	5 3/8	9 1/4	3 7/8	3 1/4	4 7/8	1 1/8	11/16	13 1/8	7 5/8	3 7/8	7 3/4	8 1/2	7 3/4	5 7/16	10 1/2	3 9/16	1 1/8	2 1/16	1/4 x 1/8 x 2	1 3/4	3 1/2	3/8 x 3/16 x 3 7/16	4 5/8
VK-50	5	5 5/8	7 1/2	11 1/8	4 3/4	3 11/16	5 1/2	1 1/4	13/16	15 3/8	9	4 3/4	8 3/4	9 5/8	8 5/8	6 3/16	12 9/16	4 7/16	1 3/8	2 5/16	5/16 x 5/32 x 2 1/4	2	4	1/2 x 1/4 x 3 7/8	5 9/16
VK-60	6	6 1/4	8 5/8	13 3/8	5 3/4	4 1/8	6 1/8	1 3/8	13/16	18 1/8	10 1/2	5 3/4	10 1/4	10 3/4	10 1/16	7 7/16	13 7/16	5	1 1/2	2 11/16	3/8 x 3/16 x 2 5/8	2 1/4	4 1/2	1/2 x 1/4 x 4 3/8	6 11/16
VK-70	7	6 1/2	9 1/4	14 5/8	6 1/4	5 3/16	6 7/16	1 3/8	15/16	20 1/8	11 3/4	6 1/4	11 1/2	11 1/2	10 3/4	8 1/16	14	5	1 5/8	3 1/8	3/8 x 3/16 x 3 1/16	2 1/2	5	5/8 x 5/16 x 4 15/16	7 5/16
VK-80	8	6 5/8	10 1/2	16 1/2	7	5 3/16	6 1/2	1 1/2	1 1/16	22 1/4	12 3/4	7	12 1/2	12 1/8	11 3/4	9	14 7/8	5 1/8	1 7/8	3 1/8	1/2 x 1/4 x 3 1/16	2 3/4	5 1/2	5/8 x 5/16 x 5 7/16	8 1/4
VK-90	9	7 3/4	11 3/8	18 1/2	7 7/8	6 3/16	7 5/8	1 5/8	1 3/16	25	14 3/8	7 7/8	14 1/4	14 1/4	13 13/16	10	17	5 7/8	2 1/8	3 15/16	1/2 x 1/4 x 3 7/8	3 1/4	6 1/2	3/4 x 3/8 x 6 3/8	9 1/4
VK-100	10	8 3/4	12 5/8	20 3/4	9	6 3/16	8 5/8	1 3/4	1 3/16	27 1/4	15 1/2	9	15 1/2	16	15 1/8	11 1/4	18 1/2	5 3/4	2 1/4	4	1/2 x 1/4 x 3 15/16	3 5/8	7 1/4	7/8 x 7/16 x 7 3/16	10 3/8
VK-120	12	9	14 5/8	24 1/4	10 3/8	6 3/16	8 7/8	2 1/8	1 5/16	32 3/8	18 1/2	10 3/8	18	17 1/2	17	13	19 1/2	6 7/8	2 1/2	4 9/16	5/8 x 5/16 x 4 1/2	4 1/4	8 1/2	1 x 1/2 x 8 3/8	12 1/8
VK-140	14	10 1/4	16 5/8	27 1/2	12	7 11/16	9 7/8	2 1/4	1 5/16	37 1/2	22	12	21	19 1/4	20 11/16	14 1/2	21 3/4	9 3/16	3	5 5/8	3/4 x 3/8 x 5 5/8	5	9	1 1/4 x 5/8 x 8 5/8	13 3/4
VK-170	17	11 1/2	19 1/2	33	14 1/2	8 3/16	11 1/8	2 1/2	1 9/16	44 3/4	26 1/4	14 1/2	24	21 1/2	22 3/4	17 3/8	24 3/4	10 7/16	3 1/4	6 3/16	3/4 x 3/8 x 6 1/8	5 3/4	10	1 1/2 x 3/4 x 9 3/4	16 1/2
VK-200	20	12 3/4	22 1/2	39	17	10 1/4	12 7/8	2 3/4	1 9/16	53	31	17	27 3/8	23 3/4	26	19 1/4	27 1/4	11	3 1/2	7	7/8 x 7/16 x 6 15/16	6 1/2	11	1 1/2 x 3/4 x 10 1/2	19 1/2

All dimensions are in inches. Use certified prints for construction. The input shaft may be rotated in either direction. Standard gear sets are cut with right hand threads giving relative shaft rotations as shown above. Shaft arrangements are shown above. Desired assembly should be specified when ordering. Standard keys are furnished with units.

▲ Tolerances: 1½" Diameter or Less = +.0000" -.0005"
Over 1½" Diameter = +.000" -.001"

Low input speeds require special order instructions. See introductory section.

Dimensions Type SM • Horizontal and Vertical

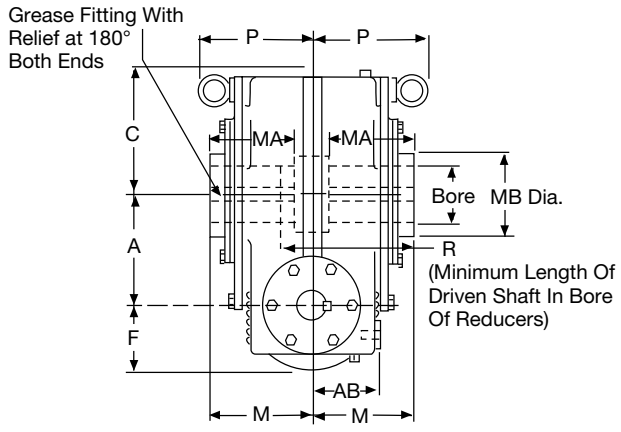

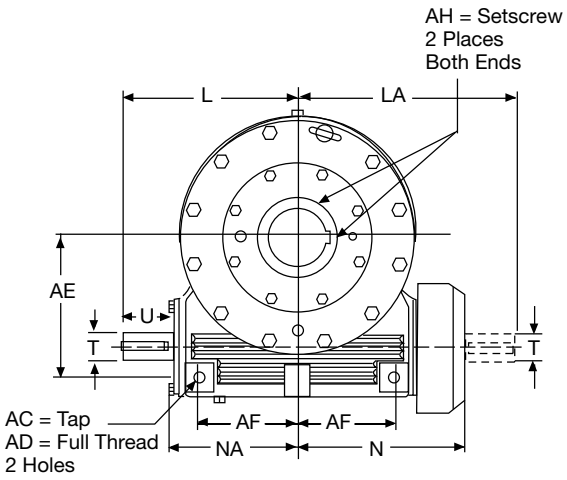

Horizontal Assemblies

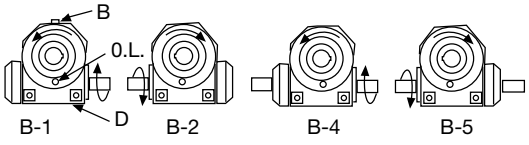

Horizontal Assemblies

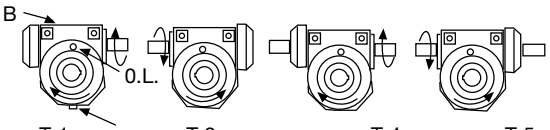

B = Breather, D = Drain, O.L. = Oil Level

Vertical Assemblies

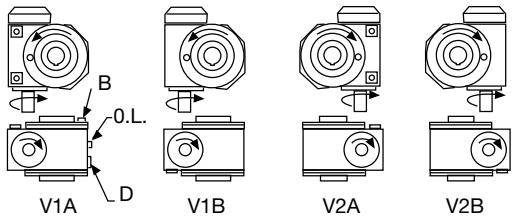

Vertical Assemblies

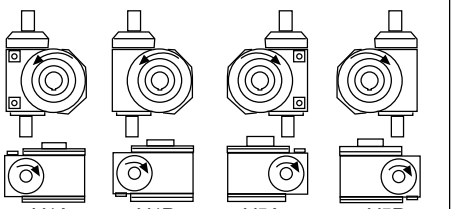

A drywell is standard for vertical assemblies sizes 60-200 only.

Unit. Size	WT. LBS.	A	AB	AC	AD	AE	AF	AH	C	F	L	LA	M	MA	MB	Bore	Keyway	N	NA	P	R	T▲	U	Keyway
SM30	65	3	2 1/2	1/2-13	7/8	4 1/2	3	1/4-20	4 1/4	2 5/8	6 1/8	7 13/16	4	3 1/2	2 7/8	1.9385/1.9405	1/2 x 1/4	5 15/16	4 3/16	4 3/16	5	7/8	1 7/8	3 1/16 x 3/32 x 1 13/16
SM35	90	3 1/2	3	1/2-13	3/4	5 1/8	3 1/2	3/8-16	4 13/16	2 5/8	7	8 5/8	4 11/16	4 1/8	3 1/8	2.1885/2.1905	1/2 x 1/4	6 5/8	5	5	5 3/4	1	2	1/4 x 1/8 x 1 15/16
SM40	145	4	3 1/2	5/8-11	1	5 3/4	3 7/8	3/8-16	5 3/8	3 1/4	7 3/4	9 13/16	5 5/16	4 11/16	3 1/2	2.438 / 2.440	5/8 x 5/16	7 3/4	5 11/16	5 1/2	6 7/16	1 1/8	2 1/16	1/4 x 1/8 x 2
SM50	225	5	4	3/4-10	1 1/4	7	4 3/4	1/2-13	7 1/2	3 11/16	8 3/4	10 15/16	5 7/8	5 1/4	4 3/16	2.938 / 2.940	3/4 x 3/8	8 5/8	6 7/16	6 15/16	7	1 3/8	2 5/16	5/16 x 5/32 x 2 1/4
SM60	310	6	4 1/4	3/4-10	1 1/8	8 1/2	5 3/4	1/2-13	8 5/8	4 1/8	10 1/4	12 5/8	6 1/2	5 3/4	4 3/4	3.438 / 3.440	7/8 x 7/16	10 1/16	7 3/4	7 3/16	7 3/4	1 1/2	2 11/16	3/8 x 3/16 x 2 5/8
SM70	430	7	4 1/2	7/8-9	1 3/8	9 3/8	6 1/4	1/2-13	9 1/4	5 3/16	11 1/2	13 7/8	6 3/4	5 7/8	5 1/2	3.938 / 3.940	1 x 1/2	10 3/4	8 3/8	7 1/2	8 1/8	1 5/8	3 1/8	3/8 x 3/16 x 3 1/16
SM80	550	8	4 5/8	1-8	1 1/2	10 1/4	7	1/2-13	10 1/2	5 3/16	12 1/2	15 1/2	7 1/4	6 1/4	6 1/4	4.438 / 4.440	1 x 1/2	11 3/4	9 3/8	8 1/4	8 3/4	1 7/8	3 1/8	1/2 x 1/4 x 3 1/16
SM90	710	9	5 5/8	1-8	1 1/2	11 1/2	7 7/8	1/2-13	11 3/8	6 3/16	14 1/4	17 3/4	8 1/4	7 1/8	7	4.938 / 4.940	1 1/4 x 7/16	13 13/16	10 3/8	9 1/4	9 7/8	2 1/8	3 15/16	1/2 x 1/4 x 3 7/8
SM100	930	10	6 1/8	1-8	1 1/2	12 3/4	9	5/8-11	12 5/8	6 3/16	15 1/2	18 13/16	9 1/4	8	7 1/2	5.438 / 5.440	1 1/4 x 7/16	15 1/8	11 11/16	9 3/4	11	2 1/4	4	1/2 x 1/4 x 3 15/16
SM120	1300	12	6 1/2	1 1/4-7	2	15 1/4	10 3/8	5/8-11	14 5/8	6 3/16	18	21 9/16	9 3/4	8 3/8	8	6.000 / 6.002	1 1/2 x 1/2	17	13 7/16	10 1/2	11 5/8	2 1/2	4 9/16	5/8 x 5/16 x 4 1/2
SM140	1900	14	7 1/2	1 1/4-7	2 1/8	18 1/2	12	5/8-11	16 5/8	7 11/16	21	26 3/8	10 3/4	9	8	6.000 / 6.002	1 1/2 x 1/2	20 11/16	15 1/2	11 1/2	13	3	5 5/8	3/4 x 3/8 x 5 5/8
SM170	3050	17	8 1/2	1 1/2-6	2 1/4	22	14 1/2	5/8-11	19 1/2	8 3/16	24	29	12 1/4	10 1/4	9 1/4	6.500 / 6.502	1 1/2 x 1/2	22 3/4	17 15/16	13 1/4	14 3/4	3 1/4	6 3/16	3/4 x 3/8 x 6 1/8
SM200	4500	20	9 1/2	1 1/2-6	2 1/4	26	16 1/4	5/8-11	22 1/2	10 1/4	27 3/8	33	13 1/2	11 1/2	9 1/4	6.500 / 6.502	1 1/2 x 1/2	26	20 3/16	14 1/2	16	3 1/2	7	7/8 x 7/16 x 6 15/16

All dimensions are in inches. Use certified prints for construction. The input shaft may be rotated in either direction. Standard gear sets are cut with right hand threads giving relative shaft rotations as shown above. Shaft arrangements are shown above. Desired assembly should be specified when ordering. Standard keys are furnished with units.

▲ Tolerances: 1 1/2" Diameter or Less = +.0000" -.0005"
Over 1 1/2" Diameter = +.000" -.001"

Low input speeds require special order instructions. See introductory section.

Dimensions for "Sugar Scoop" Motor Mounts for Type SMK

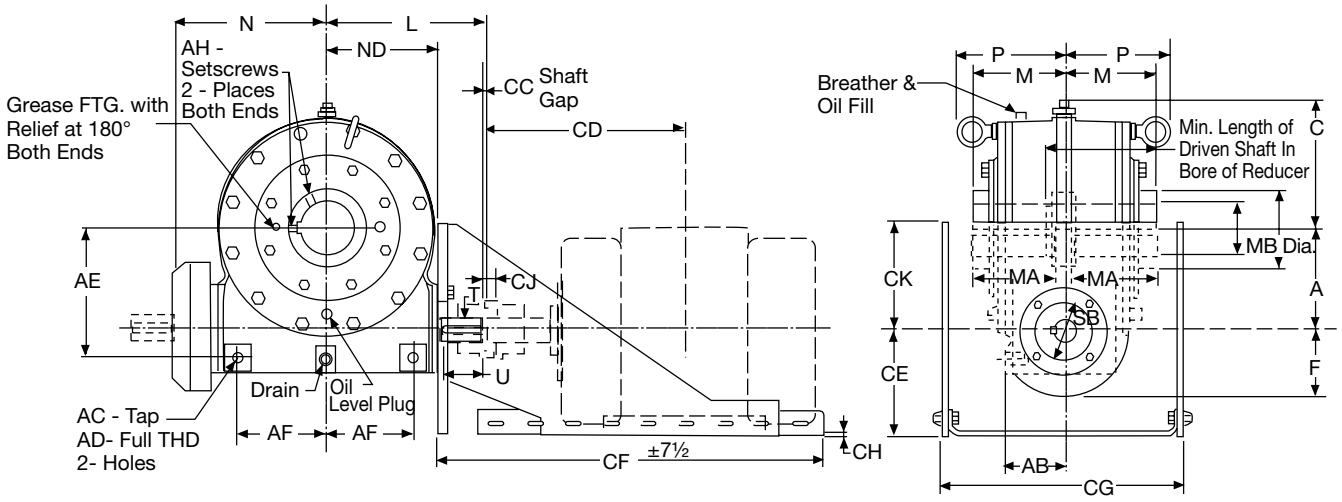

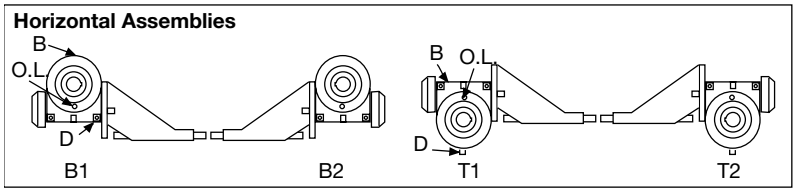

B = Breather, D = Drain, O.L. = Oil Level

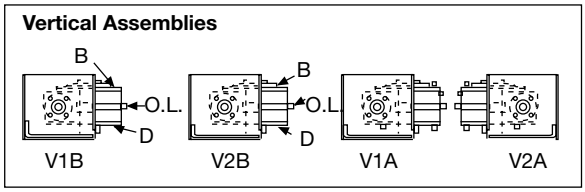

B = Breather, D = Drain, O.L. = Oil Level

A drywell is standard for vertical assemblies sizes 60-200 only.

Motor Frame Size	CJ												
	30	35	40	50	60	70	80	90	100	120	140	170	200
56T	3/8	3/8	5/8										
143T	3/8	3/8	5/8	5/8									
145T	3/8	3/8	5/8	5/8									
182T	5/8	5/8	5/8	5/8	5/8	3/4	7/8						
184T	5/8	5/8	5/8	5/8	5/8	3/4	7/8						
213T	5/8	5/8	5/8	3/4	3/4	3/4	7/8	1 5/16					
215T	5/8	5/8	5/8	3/4	3/4	3/4	7/8	1 5/16	1 5/16				
254T				7/8	7/8	7/8	7/8	1 5/16	1 5/16	1 1/4			
256T				7/8	7/8	7/8	7/8	1 5/16	1 5/16	1 1/4			
284T					7/8	7/8	7/8	1 5/16	1 5/16	1 1/4	2 1/8		
286T					7/8	7/8	7/8	1 5/16	1 5/16	1 1/4	2 1/8		
324T						1 5/16	1 5/16	1 5/16	1 5/16	1 1/4	2 1/8	2 1/8	
326T						1 5/16	1 5/16	1 5/16	1 5/16	1 1/4	2 1/8	2 1/8	
364T							1 5/16	1 5/16	1 5/16	1 1/4	2 1/8	2 1/8	2 1/8
365T								1 5/16	1 5/16	1 1/4	2 1/8	2 1/8	2 1/8
404T									1 7/8	1 7/8	2 1/8	2 1/8	2 1/8
405T										1 7/8	2 1/8	2 1/8	2 1/8

Motor Frame Size	CF						
	CC	CD	CE	±7½	CG	CH	CK
56T	1/8	6 1/2	4 7/8	25	12 5/8	3/16	4 7/8
143T	1/8	6 1/2	4 7/8	25	12 5/8	3/16	4 7/8
145T	1/8	7	4 7/8	25	12 5/8	3/16	4 7/8
182T	1/8	7 3/4	4 7/8	25	12 5/8	3/16	4 7/8
184T	1/8	8 1/4	4 7/8	25	12 5/8	3/16	4 7/8
213T	1/8	9 5/8	5 9/16	28	12 3/4	1/4	5
215T	1/8	10 3/8	5 9/16	28	12 3/4	1/4	5
254T	1/8	12 3/8	6 5/8	31	15	5/16	6 5/8
256T	1/8	13 1/4	6 5/8	31	15	5/16	6 5/8
284T	1/8	14 1/8	7 5/8	31	17	5/16	7 5/8
286T	1/8	14 7/8	7 5/8	31	17	5/16	7 5/8
324T	1/8	15 3/4	8 1/2	35 1/4	19 1/16	3/8	8 1/2
326T	1/8	16 1/2	8 1/2	35 1/4	19 1/16	3/8	8 1/2
364T	1/8	17 3/8	9 1/2	35 1/4	21 5/16	3/8	9 1/2
365T	1/8	17 7/8	9 1/2	35 1/4	21 5/16	3/8	9 1/2
404T	1/8	20	10 1/2	35 1/4	23 5/16	3/8	10 1/2
405T	1/8	20 3/4	10 1/2	35 1/4	23 5/16	3/8	10 1/2

Unit Size	A	AB	AC	AD	AE	AF	AH	C	F	L	M	MA	MB	N	ND	P	R	SB	T▲	U	Keyway	Bore	Keyway
SMK-30	3	2 1/2	1/2-13	7/8	4 1/2	3	1/4-20	4 1/4	2 5/8	6 1/8	4	3 1/2	2 7/8	5 15/16	4	4 3/16	5	3 1/8	7/8	1 7/16	3/16 x 3/32 x 1 13/16	1.9385/1.9405	1/2 x 1/4
SMK-35	3 1/2	3	1/2-13	3/4	5 1/8	3 1/2	3/8-16	4 13/16	2 5/8	7	4 11/16	4 1/8	3 1/8	6 5/8	4 3/4	5	5 3/4	3 3/16	1	2	1/4 x 1/8 x 1 15/16	2.1885/2.1905	1/2 x 1/4
SMK-40	4	3 1/2	5/8-11	1	5 3/4	3 7/8	3/8-16	5 3/8	3 1/4	7 3/4	5 5/16	4 11/16	3 1/2	7 3/4	5 7/16	5 1/2	6 7/16	3 9/16	1 1/8	2 1/16	1/4 x 1/8 x 2	2.438 / 2.440	5/8 x 5/16
SMK-50	5	4	3/4-10	1 1/4	7	4 3/4	1/2-13	7 1/2	3 11/16	8 3/4	5 7/8	5 1/4	4 3/16	8 5/8	6 3/16	6 15/16	7	4 7/16	1 3/8	2 5/16	5/16 x 5/32 x 2 1/4	2.938 / 2.940	3/4 x 3/8
SMK-60	6	4 1/4	3/4-10	1 1/8	8 1/2	5 3/4	1/2-13	8 5/8	4 1/8	10 1/4	6 1/2	5 3/4	4 3/4	10 1/16	7 7/16	7 3/16	7 3/4	5	1 1/2	2 11/16	3/8 x 3/16 x 2 5/8	3.438 / 3.440	7/8 x 7/16
SMK-70	7	4 1/2	7/8-9	1 3/8	9 3/8	6 1/4	1/2-13	9 1/4	5 3/16	11 1/2	6 3/4	5 7/8	5 1/2	10 3/4	8 1/16	7 1/2	8 1/8	5	1 5/8	3 1/8	3/8 x 3/16 x 3 1/16	3.938 / 3.940	1 x 1/2
SMK-80	8	4 5/8	1-8	1 1/2	10 1/4	7	1/2-13	10 1/2	5 3/16	12 1/2	7 1/4	6 1/4	6 1/4	11 3/4	9	8 1/4	8 3/4	5 1/8	1 7/8	3 1/8	1/2 x 1/4 x 3 1/16	4.438 / 4.440	1 x 1/2
SMK-90	9	5 5/8	1-8	1 1/2	11 1/2	7 7/8	1/2-13	11 3/8	6 3/16	14 1/4	8 1/4	7 1/8	7	13 13/16	10	9 1/4	9 7/8	5 7/8	2 1/8	3 15/16	1/2 x 1/4 x 3 7/8	4.938 / 4.940	1 1/4 x 7/16
SMK-100	10	6 1/8	1-8	1 1/2	12 3/4	9	5/8-11	12 5/8	6 3/16	15 1/2	9 1/4	8	7 1/2	15 1/8	11 1/4	9 3/4	11	5 3/4	2 1/4	4	1/2 x 1/4 x 3 15/16	5.438 / 5.440	1 1/4 x 7/16
SMK-120	12	6 1/2	1 1/4-7	2	15 1/4	10 3/8	5/8-11	14 5/8	6 3/16	18	9 3/4	8 3/8	8	17	13	10 1/2	11 5/8	6 7/8	2 1/2	4 9/16	5/4 x 5/16 x 4 1/2	6.000 / 6.002	1 1/2 x 1/2
SMK-140	14	7 1/2	1 1/4-7	2 1/8	18 1/2	12	5/8-11	16 5/8	7 11/16	21	10 3/4	9	8	20 11/16	14 1/2	11 1/2	13	9 3/16	3	5 5/8	3/4 x 3/8 x 5 5/8	6.000 / 6.002	1 1/2 x 1/2
SMK-170	17	8 1/2	1 1/2-6	2 1/4	22	14 1/2	5/8-11	19 1/2	8 3/16	24	12 1/4	10 1/4	9 1/4	22 3/4	17 3/8	13 1/4	14 3/4	10 7/16	3 1/4	6 3/16	3/4 x 3/8 x 6 1/8	6.500 / 6.502	1 1/2 x 1/2
SMK-200	20	9 1/2	1 1/2-6	2 1/4	26	16 1/4	5/8-11	22 1/2	10 1/4	27 3/8	13 1/2	10 1/2	9 1/4	26	19 1/4	14 1/2	16	11	3 1/2	7	7/8 x 7/16 x 6 15/16	6.500 / 6.502	1 1/2 x 1/2

All dimensions are in inches. Use certified prints for construction. The input shaft may be rotated in either direction. Standard gear sets are cut with right hand threads giving relative shaft rotations as shown above. Shaft arrangements are shown above. Desired assembly should be specified when ordering. Standard keys are furnished with units.

▲ Tolerances: 1½" Diameter or Less = +.0000" -.0005"
Over 1½" Diameter = +.000" -.001"

Low input speeds require special order instructions. See introductory section.

Dimensions Type SMB • Base Mount

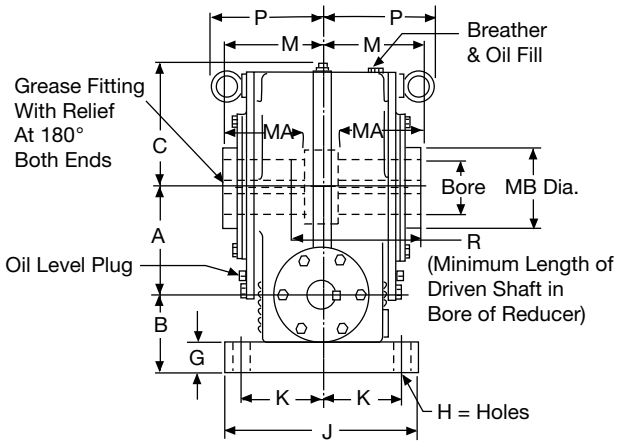

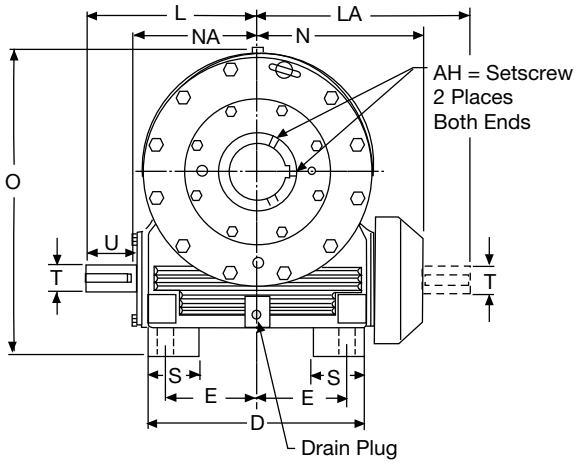

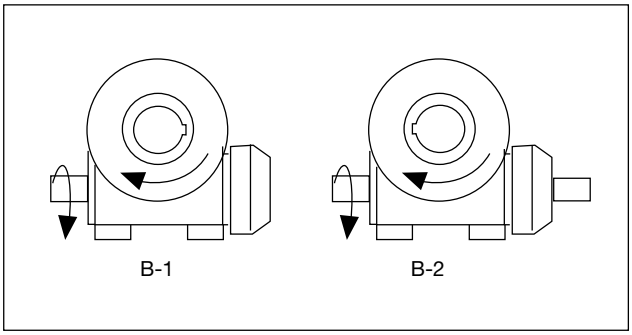

Unit Size	WT. LBS.	A	AH	B	C	D	E	G	H	J	K	L	LA	M	MA	MB	N	NA	O	P	R	S	T▲	U	Keyway	Bore	Keyway
SMB-30	82	3	1/4-20	3	4 1/4	7 7/8	3 3/8	7/8	9/16	7 5/8	3	6 1/8	7 13/16	4	3 1/2	2 7/8	5 15/16	4 3/16	10 1/4	4 3/16	5	1 3/4	7/8	1 7/8	3/16 x 3/32 x 1 13/16	1.9385/1.9405	1/2 x 1/4
SMB-35	117	3 1/2	3/8-16	3 3/8	4 13/16	9 1/4	3 7/8	1 1/8	11/16	9	3 3/4	7	8 5/8	4 11/16	4 1/8	3 1/8	6 5/8	5	11 11/16	5	5 3/4	2 1/4	1	2	1/4 x 1/8 x 1 15/16	2.1885/2.1905	1/2 x 1/4
SMB-40	195	4	3/8-16	4	5 3/8	10 3/8	4 1/4	1 1/2	13/16	10 1/2	4 3/8	7 3/4	9 13/16	5 5/16	4 11/16	3 1/2	7 3/4	5 11/16	13 3/8	5 1/2	6 7/16	2 1/2	1 1/8	2 1/16	1/4 x 1/8 x 2	2.438 / 2.440	5/8 x 5/16
SMB-50	285	5	1/2-13	4 5/8	7 1/2	11 1/2	4 3/4	1 3/4	13/16	12	4 7/8	8 3/4	10 15/16	5 7/8	5 1/4	4 3/16	8 5/8	6 7/16	17 1/8	6 15/16	7	3	1 3/8	2 5/16	5/16 x 5/32 x 2 1/4	2.938 / 2.940	3/4 x 3/8
SMB-60	405	6	1/2-13	5	8 5/8	13 1/4	5 1/4	1 1/2	15/16	13	5 1/4	10 1/4	12 5/8	6 1/2	5 3/4	4 3/4	10 1/16	7 3/4	19 5/8	7 3/16	7 3/4	3	1 1/2	2 11/16	3/8 x 3/16 x 2 5/8	3.438 / 3.440	7/8 x 7/16
SMB-70	545	7	1/2-13	5 3/8	9 1/4	14 3/4	6	2	1 1/16	14	5 5/8	11 1/2	13 7/8	6 3/4	5 7/8	5 1/2	10 3/4	8 3/8	21 5/8	7 1/2	8 1/8	3 1/2	1 5/8	3 1/8	3/8 x 3/16 x 3 1/16	3.938 / 3.940	1 x 1/2
SMB-80	680	8	1/2-13	5 3/4	10 1/2	16 1/2	6 3/4	2 1/4	1 3/16	14 1/2	6	12 1/2	15 1/2	7 1/4	6 1/4	6 1/4	11 3/4	9 3/8	24 1/4	8 1/4	8 3/4	4	1 7/8	3 1/8	1/2 x 1/4 x 3 1/16	4.438 / 4.440	1 x 1/2
SMB-90	875	9	1/2-13	6 1/4	11 3/8	18 3/4	7 3/4	2 1/2	1 7/16	17 1/2	7 1/4	14 1/4	17 3/4	8 1/4	7 1/8	7	13 13/16	10 3/8	26 5/8	9 1/4	9 7/8	4	2 1/8	3 15/16	1/2 x 1/4 x 3 7/8	4.938 / 4.940	1 1/4 x 7/16
SMB-100	1125	10	5/8-11	6 3/4	12 5/8	21	8 3/4	2 7/8	1 7/16	18	7 1/2	15 1/2	18 13/16	9 1/4	8	7 1/2	15 1/8	11 11/16	29 3/8	9 3/4	11	4 1/4	2 1/4	4	1/2 x 1/4 x 3 15/16	5.438 / 5.440	1 1/4 x 7/16
SMB-120	1750	12	5/8-11	7 1/2	14 5/8	24 1/2	10 1/2	2 3/4	1 9/16	21	9	18	21 9/16	9 3/4	8 3/4	8	17	13 7/16	34 1/8	10 1/2	11 5/8	4 1/2	2 1/2	4 9/16	5/8 x 5/16 x 4 1/2	6.000 / 6.002	1 1/2 x 1/2
SMB-140	2585	14	5/8-11	9 1/2	16 5/8	27 1/2	11 1/2	3	1 11/16	21 3/4	9 1/4	21	26 3/8	10 3/4	9	8	20 11/16	15 1/2	40 1/8	11 1/2	13	5	3	5 5/8	3/4 x 3/8 x 5 5/8	6.000 / 6.002	1 1/2 x 1/2
SMB-170	3860	17	5/8-11	10 1/2	19 1/2	32	13 1/4	3 3/8	1 11/16	24	10 1/4	24	29	12 1/4	10 1/4	9 1/4	22 3/4	17 15/16	47	13 1/4	14 3/4	5 3/4	3 1/4	6 3/16	3/4 x 3/8 x 6 1/8	6.500 / 6.502	1 1/2 x 1/2
SMB-200	5360	20	5/8-11	11 1/2	22 1/2	36	14 3/4	3 5/8	11 15/16	27	11 1/2	27 3/8	33	13 1/2	10 1/2	9 1/4	26	20 3/16	54	14 1/2	16	6 1/2	3 1/2	7	7/8 x 7/16 x 6 15/16	6.500 / 6.502	1 1/2 x 1/2

All dimensions are in inches. Use certified prints for construction. The input shaft may be rotated in either direction. Standard gear sets are cut with right hand threads giving relative shaft rotations as shown above. Shaft arrangements are shown above. Desired assembly should be specified when ordering. Standard keys are furnished with units.

▲ Tolerances: 1 1/2" Diameter or Less = +.0000" -.0005"
Over 1 1/2" Diameter = +.000" -.001"

Low input speeds require special order instructions. See introductory section.

Dimensions for "Sugar Scoop" Motor Mounts for Type SMBK

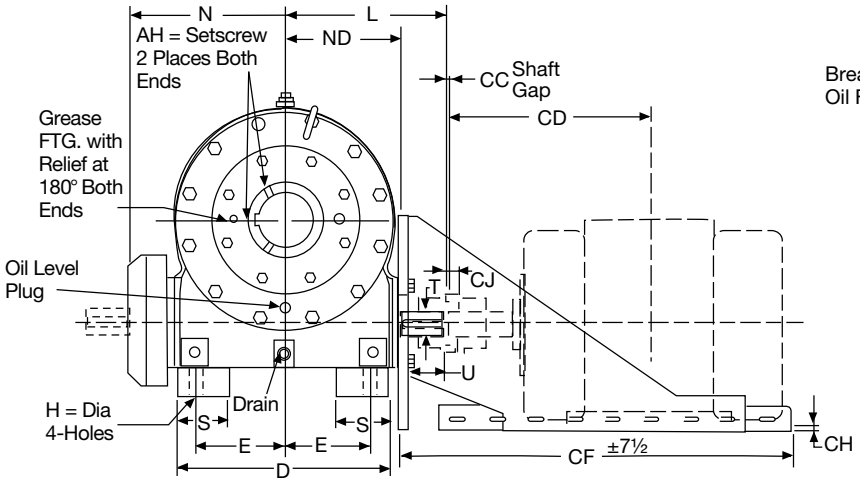

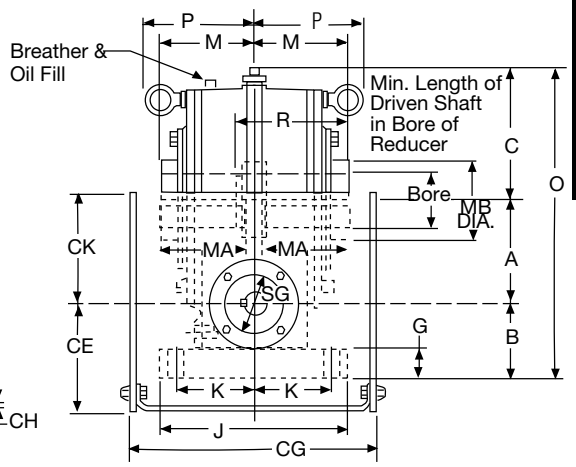

Motor Frame Size	CJ												
	30	35	40	50	60	70	80	90	100	120	140	170	200
56T	3/8	3/8	5/8										
143T	3/8	3/8	5/8	5/8									
145T	3/8	3/8	5/8	5/8									
182T	5/8	5/8	5/8	5/8	5/8	3/4	7/8						
184T	5/8	5/8	5/8	5/8	5/8	3/4	7/8						
213T	5/8	5/8	5/8	3/4	5/8	3/4	7/8	1 5/16					
215T	5/8	5/8	5/8	3/4	5/8	3/4	7/8	1 5/16	1 5/16				
254T				7/8	7/8	7/8	7/8	1 5/16	1 5/16	1 1/4			
256T				7/8	7/8	7/8	7/8	1 5/16	1 5/16	1 1/4			
284T					7/8	7/8	7/8	1 5/16	1 5/16	1 1/4	2 1/8		
286T					7/8	7/8	7/8	1 5/16	1 5/16	1 1/4	2 1/8		
324T						1 5/16	1 5/16	1 5/16	1 5/16	1 1/4	2 1/8	2 1/8	
326T						1 5/16	1 5/16	1 5/16	1 5/16	1 1/4	2 1/8	2 1/8	
364T							1 5/16	1 5/16	1 5/16	1 1/4	2 1/8	2 1/8	2 1/8
365T								1 5/16	1 5/16	1 1/4	2 1/8	2 1/8	2 1/8
404T									1 7/8	1 7/8	2 1/8	2 1/8	2 1/8
405T										1 7/8	2 1/8	2 1/8	2 1/8

Motor Frame Size	CF						
	CC	CD	CE	±7½	CG	CH	CK
56T	1/8	6 1/2	4 7/8	25	12 5/8	3/16	4 7/8
143T	1/8	6 1/2	4 7/8	25	12 5/8	3/16	4 7/8
145T	1/8	7	4 7/8	25	12 5/8	3/16	4 7/8
182T	1/8	7 3/4	4 7/8	25	12 5/8	3/16	4 7/8
184T	1/8	8 1/4	4 7/8	25	12 5/8	3/16	4 7/8
213T	1/8	9 5/8	5 9/16	28	12 3/4	1/4	5
215T	1/8	10 3/8	5 9/16	28	12 3/4	1/4	5
254T	1/8	12 3/8	6 5/8	31	15	5/16	6 5/8
256T	1/8	13 1/4	6 5/8	31	15	5/16	6 5/8
284T	1/8	14 1/8	7 5/8	31	17	5/16	7 5/8
286T	1/8	14 7/8	7 5/8	31	17	5/16	7 5/8
324T	1/8	15 3/4	8 1/2	35 1/4	19 1/16	3/8	8 1/2
326T	1/8	16 1/2	8 1/2	35 1/4	19 1/16	3/8	8 1/2
364T	1/8	17 3/8	9 1/2	35 1/4	21 5/16	3/8	9 1/2
365T	1/8	17 7/8	9 1/2	35 1/4	21 5/16	3/8	9 1/2
404T	1/8	20	10 1/2	35 1/4	23 5/16	3/8	10 1/2
405T	1/8	20 3/4	10 1/2	35 1/4	23 5/16	3/8	10 1/2

Unit Size	A	AH	B	C	D	E	G	H	J	K	L	M	MA	MB	N	ND	O	P	R	S	SB	T▲	U	Keyway	Bore	Key-way
SMBK-30	3	1/4-20	3	4 1/4	7 7/8	3 3/8	7/8	9/16	7 5/8	3	6 1/8	4	3 1/2	2 7/8	5 15/16	4	10 1/4	4 3/16	5	1 3/4	3 1/8	7/8	1 7/8	3/16 x 3/32 x 1 13/16	1.9385/1.9405	1/2 x 1/4
SMBK-35	3 1/2	3/8-16	3 3/8	4 13/16	9 1/4	3 7/8	1 1/8	11/16	9	3 3/4	7	4 11/16	4 1/8	3 1/8	6 5/8	4 3/4	11 11/16	5	5 3/4	2 1/4	3 3/16	1	2	1/4 x 1/8 x 1 15/16	2.1885/2.1905	1/2 x 1/4
SMBK-40	4	3/8-16	4	5 3/8	10 3/8	4 1/4	1 1/2	13/16	10 1/2	4 3/8	7 3/4	5 5/16	4 11/16	3 1/2	7 3/4	5 7/16	13 3/8	5 1/2	6 7/16	2 1/2	3 9/16	1 1/8	2 1/16	1/4 x 1/8 x 2	2.438 / 2.440	5/8 x 5/16
SMBK-50	5	1/2-13	4 5/8	7 1/2	11 1/2	4 3/4	1 3/4	13/16	12	4 7/8	8 3/4	5 7/8	5 1/4	4 3/16	8 5/8	6 3/16	17 1/8	6 15/16	7	3	4 7/16	1 3/8	2 5/16	5/16 x 5/32 x 2 1/4	2.938 / 2.940	3/4 x 3/8
SMBK-60	6	1/2-13	5	8 5/8	13 1/4	5 1/4	1 1/2	15/16	13	5 1/4	10 1/4	6 1/2	5 3/4	4 3/4	10 1/16	7 7/16	19 5/8	7 3/16	7 3/4	3	5	1 1/2	2 11/16	3/8 x 3/16 x 2 5/8	3.438 / 3.440	7/8 x 7/16
SMBK-70	7	1/2-13	5 3/8	9 1/4	14 3/4	6	2	1 1/16	14	5 3/8	11 1/2	6 3/4	5 7/8	5 1/2	10 3/4	8 1/16	21 5/8	7 1/2	8 1/8	3 1/2	5	1 5/8	3 1/8	3/8 x 3/16 x 3 1/16	3.938 / 3.940	1 x 1/2
SMBK-80	8	1/2-13	5 3/4	10 1/2	16 1/2	6 3/4	2 1/4	1 3/16	14 1/2	6	12 1/2	7 1/4	6 1/4	6 1/4	11 3/4	9	24 1/4	8 1/4	8 3/4	4	5 1/8	1 7/8	3 1/8	1/2 x 1/4 x 3 1/16	4.438 / 4.440	1 x 1/2
SMBK-90	9	1/2-13	6 1/4	11 3/8	18 3/4	7 3/4	2 1/2	1 7/16	17 1/2	7 1/4	14 1/4	8 1/4	7 1/8	7	13 13/16	10	26 5/8	9 1/4	9 7/8	4	5 7/8	2 1/8	3 15/16	1/2 x 1/4 x 3 7/8	4.938 / 4.940	1 1/4 x 7/16
SMBK-100	10	5/8-11	6 3/4	12 5/8	21	8 3/4	2 7/8	1 7/16	18	7 1/2	15 1/2	9 1/4	8	7 1/2	15 1/8	11 1/4	29 3/8	9 3/4	11	4 1/4	5 3/4	2 1/4	4	1/2 x 1/4 x 3 15/16	5.438 / 5.440	1 1/4 x 7/16
SMBK-120	12	5/8-11	7 1/2	14 5/8	24 1/2	10 1/2	2 3/4	1 9/16	21	9	18	9 3/4	8 3/8	8	17	13	34 1/8	10 1/2	11 5/8	4 1/2	6 7/8	2 1/2	4 9/16	5/8 x 5/16 x 4 1/2	6.000 / 6.002	1 1/2 x 1/2
SMBK-140	14	5/8-11	9 1/2	16 5/8	27 1/2	11 1/2	3	1 11/16	21 3/4	9 1/4	21	10 3/4	9	8	20 11/16	14 1/2	40 1/8	11 1/2	13	5	9 3/16	3	5 5/8	3/4 x 3/8 x 5 5/8	6.000 / 6.002	1 1/2 x 1/2
SMBK-170	17	5/8-11	10 1/2	19 1/2	32	13 1/4	3 3/8	1 11/16	24	10 1/4	24	12 1/4	10 1/4	9 1/4	22 3/4	17 3/8	47	13 1/4	14 3/4	5 3/4	10 7/16	3 1/4	6 3/16	3/4 x 3/8 x 6 1/8	6.500 / 6.502	1 1/2 x 1/2
SMBK-200	20	5/8-11	11 1/2	22 1/2	36	14 3/4	3 5/8	1 15/16	27	11 1/2	27 3/8	13 1/2	10 1/2	9 1/4	26	19 1/4	54	14 1/2	16	6 1/2	11	3 1/2	7	7/8 x 7/16 x 6 15/16	6.500 / 6.502	1 1/2 x 1/2

All dimensions are in inches. Use certified prints for construction. The input shaft may be rotated in either direction. Standard gear sets are cut with right hand threads giving relative shaft rotations as shown above. Shaft arrangements are shown above. Desired assembly should be specified when ordering. Standard keys are furnished with units.

▲ Tolerances: 1½" Diameter or Less = +.0000" -.0005"
Over 1½" Diameter = +.000" -.001"

Low input speeds require special order instructions. See introductory section.

Dimensions Type SMF • Wall-Mounted and Vertical

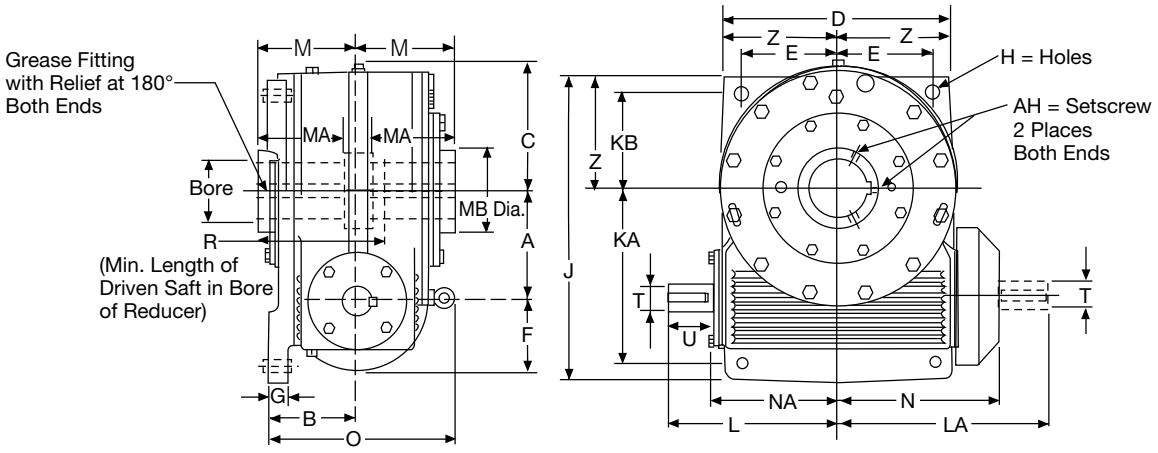

Wall-Mounted

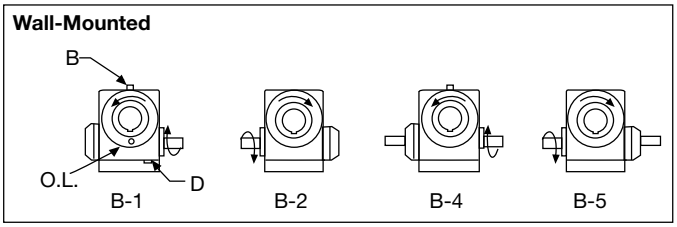

Wall-Mounted

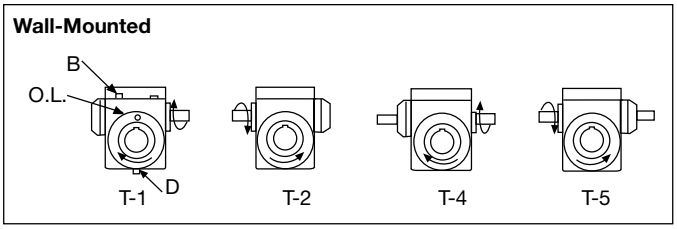

Vertical Assemblies

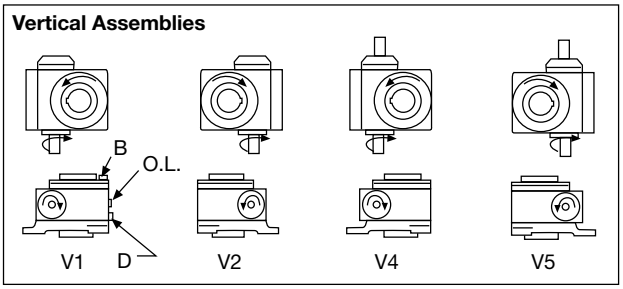

B = Breather D = Drain O.L. = Oil Level

A drywell is standard for vertical assemblies sizes 60-200 only.

Unit Size	WT. LBS.	A	AH	B	C	D	E	F	G	H	J	KA	KB	L	LA	M	MA	MB	N	NA	O	R	T▲	U	Keyway	Bore	Keyway	Z
SMF-30	75	3	1/4-20	3 1/2	4 1/4	7 1/8	3	2 5/8	3/4	9/16	10 1/8	6	3	6 1/8	7 13/16	4	3 1/2	2 7/8	5 15/16	4 3/16	7 11/16	5	7/8	1 7/8	3/16 x 3/32 x 1 13/16	1.9385/1.9405	1/2 x 1/4	3 9/16
SMF-35	105	3 1/2	3/8-16	4 1/8	4 13/16	8 3/8	3 1/2	2 5/8	7/8	11/16	11 3/4	6 7/8	3 1/2	7	8 5/8	4 11/16	4 1/8	3 1/8	6 5/8	5	9 1/8	5 3/4	1	2	1/4 x 1/8 x 15/16	2.1885/2.1905	1/2 x 1/4	4 3/16
SMF-40	170	4	3/8-16	5	5 3/8	9 1/4	3 7/8	3 1/4	1 1/8	11/16	13 1/8	7 5/8	3 7/8	7 3/4	9 13/16	5 5/16	4 11/16	3 1/2	7 3/4	5 11/16	10 1/2	6 7/16	1 1/8	2 1/16	1/4 x 1/8 x 2	2.438 / 2.440	5/8 x 5/16	4 5/8
SMF-50	250	5	1/2-13	5 5/8	7 1/2	11 1/8	4 3/4	3 11/16	1 1/4	13/16	15 3/8	9	4 3/4	8 3/4	10 15/16	5 7/8	5 1/4	4 3/16	8 5/8	6 7/16	12 9/16	7	1 3/8	2 5/16	5/16 x 5/32 x 2 1/4	2.938 / 2.940	3/4 x 3/8	5 9/16
SMF-60	370	6	1/2-13	6 1/4	8 5/8	13 3/8	5 3/4	4 1/8	1 3/8	13/16	18 1/8	10 1/2	5 3/4	10 1/4	12 5/8	6 1/2	5 3/4	4 3/4	10 1/16	7 3/4	13 7/16	7 3/4	1 1/2	2 11/16	3/8 x 3/16 x 2 5/8	3.438 / 3.440	7/8 x 7/16	6 11/16
SMF-70	490	7	1/2-13	6 1/2	9 1/4	14 5/8	6 1/4	5 3/16	1 3/8	15/16	20 1/8	11 3/4	6 1/4	11 1/2	13 7/8	6 3/4	5 7/8	5 1/2	10 3/4	8 3/8	14	8 1/8	1 5/8	3 1/8	3/8 x 3/16 x 3 1/16	3.938 / 3.940	1x1/2	7 5/16
SMF-80	610	8	1/2-13	6 5/8	10 1/2	16 1/2	7	5 3/16	1 1/2	1 1/16	22 1/4	12 3/4	7	12 1/2	15 1/2	7 1/4	6 1/4	6 1/4	11 3/4	9 3/8	14 7/8	8 3/4	1 7/8	3 1/8	1/2 x 1/4 x 3 1/16	4.438 / 4.440	1 x 1/2	8 1/4
SMF-90	780	9	1/2-13	7 3/4	11 3/8	18 1/2	7 7/8	6 3/16	1 5/8	1 3/16	25	14 3/8	7 7/8	14 1/4	17 3/4	8 1/4	7 1/8	7	13 13/16	10 3/8	17	9 7/8	2 1/8	3 15/16	1/2 x 1/4 x 3 7/8	4.938 / 4.940	1 1/4 x 7/16	9 1/4
SMF-100	1000	10	5/8-11	8 3/4	12 5/8	20 3/4	9	6 3/16	1 3/4	1 3/16	27 1/4	15 1/2	9	15 1/2	18 13/16	9 1/4	8	7 1/2	15 1/8	11 11/16	18 1/2	11	2 1/4	4	1/2 x 1/4 x 3 15/16	5.438 / 5.440	1 1/4 x 7/16	10 3/8
SMF-120	1600	12	5/8-11	9	14 5/8	24 1/4	10 3/8	6 3/16	2 1/8	1 5/16	32 3/8	18 1/2	10 3/8	18	21 9/16	9 3/4	8 3/4	8	17	13 7/16	19 1/2	11 5/8	2 1/2	4 9/16	5/8 x 5/16 x 4 1/2	6.000 / 6.002	1 1/2 x 1/2	12 1/8
SMF-140	2400	14	5/8-11	10 1/4	16 5/8	27 1/2	12	7 11/16	2 1/4	1 5/16	37 1/2	22	12	21	26 3/8	10 3/4	9	8	20 11/16	15 1/2	21 3/4	13	3	5 5/8	3/4 x 3/8 x 5 5/8	6.000 / 6.002	1 1/2 x 1/2	13 3/4
SMF-170	3600	17	5/8-11	11 1/2	19 1/2	33	14 1/2	8 3/16	2 1/2	1 9/16	44 3/4	26 1/4	14 1/2	24	29	12 1/4	10 1/4	9 1/4	22 3/4	17 15/16	24 3/4	14 3/4	3 1/4	6 3/16	3/4 x 3/8 x 6 1/8	6.500 / 6.502	1 1/2 x 1/2	16 1/2
SMF-200	5000	20	5/8-11	12 3/4	22 1/2	39	17	10 1/4	2 3/4	1 9/16	53	31	17	27 3/8	33	13 1/2	11 1/2	9 1/4	26	20 3/16	27 1/4	16	3 1/2	7	7/8 x 7/16 x 6 15/16	6.500 / 6.502	1 1/2 x 1/2	19 1/2

All dimensions are in inches. Use certified prints for construction. The input shaft may be rotated in either direction. Standard gear sets are cut with right hand threads giving relative shaft rotations as shown above. Shaft arrangements are shown above. Desired assembly should be specified when ordering. Standard keys are furnished with units.

▲ Tolerances: 1 1/2" Diameter or Less = +.0000" -.0005"
Over 1 1/2" Diameter = +.000" -.001"

Low input speeds require special order instructions. See introductory section.

Dimensions for "Sugar Scoop" Motor Mounts for Type SMFK

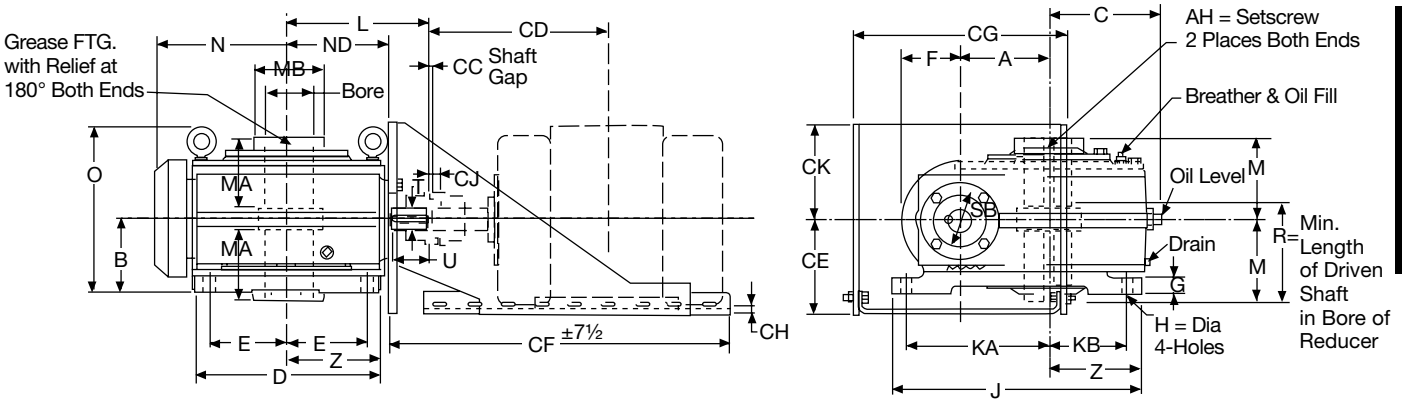

Vertical Assemblies

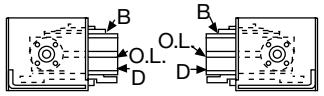

B = Breather
D = Drain
O.L. = Oil Level

A drywell is standard for vertical assemblies sizes 60-200 only.

Motor Frame Size	CJ												
	30	35	40	50	60	70	80	90	100	120	140	170	200
56T	3/8	3/8	5/8										
143T	3/8	3/8	5/8	5/8									
145T	3/8	3/8	5/8	5/8									
182T	5/8	5/8	5/8	5/8	5/8	3/4	7/8						
184T	5/8	5/8	5/8	5/8	5/8	3/4	7/8						
213T	5/8	5/8	5/8	3/4	3/4	3/4	7/8	1 5/16					
215T	5/8	5/8	5/8	3/4	3/4	3/4	7/8	1 5/16	1 5/16				
254T				7/8	7/8	7/8	7/8	1 5/16	1 5/16	1 1/4			
256T				7/8	7/8	7/8	7/8	1 5/16	1 5/16	1 1/4			
284T					7/8	7/8	7/8	1 5/16	1 5/16	1 1/4	2 1/8		
286T					7/8	7/8	7/8	1 5/16	1 5/16	1 1/4	2 1/8		
324T						1 5/16	1 5/16	1 5/16	1 5/16	1 1/4	2 1/8	2 1/8	
326T						1 5/16	1 5/16	1 5/16	1 5/16	1 1/4	2 1/8	2 1/8	
364T							1 5/16	1 5/16	1 5/16	1 1/4	2 1/8	2 1/8	2 1/8
365T								1 5/16	1 5/16	1 1/4	2 1/8	2 1/8	2 1/8
404T									1 7/8	1 7/8	2 1/8	2 1/8	2 1/8
405T										1 7/8	2 1/8	2 1/8	2 1/8

Motor Frame Size	CF						
	CC	CD	CE	±7½	CG	CH	CK
56T	1/8	6 1/8	4 7/8	25	12 5/8	3/16	4 7/8
143T	1/8	6 1/2	4 7/8	25	12 5/8	3/16	4 7/8
145T	1/8	7	4 7/8	25	12 5/8	3/16	4 7/8
182T	1/8	7 3/4	4 7/8	25	12 5/8	3/16	4 7/8
184T	1/8	8 1/4	4 7/8	25	12 5/8	3/16	4 7/8
213T	1/8	9 5/8	5 9/16	28	12 3/4	1/4	5
215T	1/8	10 3/8	5 9/16	28	12 3/4	1/4	5
254T	1/8	12 3/8	6 5/8	31	15	5/16	6 5/8
256T	1/8	13 1/4	6 5/8	31	15	5/16	6 5/8
284T	1/8	14 1/8	7 5/8	31	17	5/16	7 5/8
286T	1/8	14 7/8	7 5/8	31	17	5/16	7 5/8
324T	1/8	15 3/4	8 1/2	35 1/4	19 1/16	3/8	8 1/2
326T	1/8	16 1/2	8 1/2	35 1/4	19 1/16	3/8	8 1/2
364T	1/8	17 3/8	9 1/2	35 1/4	21 5/16	3/8	9 1/2
365T	1/8	17 7/8	9 1/2	35 1/4	21 5/16	3/8	9 1/2
404T	1/8	20	10 1/2	35 1/4	23 5/16	3/8	10 1/2
405T	1/8	20 3/4	10 1/2	35 1/4	23 5/16	3/8	10 1/2

Unit Size	A	AH	B	C	D	E	F	G	H	J	KA	KB	L	M	MA	MB	N	ND	O	R	SB	T▲	U	Keyway	Bore	Keyway	Z
SMFK-30	3	1/4-20	3 1/2	4 1/4	7 1/8	3	2 5/8	3/4	9/16	10 1/8	6	3	6 1/8	4	3 1/2	2 7/8	5 15/16	4	7 11/16	5	3 1/8	7/8	1 7/8	3/16 x 3/32 x 1 13/16	1.9385/1.9405	1/2 x 1/4	3 9/16
SMFK-35	3 1/2	3/8-16	4 1/8	4 13/16	8 3/8	3 1/2	2 5/8	7/8	11/16	11 3/4	6 7/8	3 1/2	7	4 11/16	4 1/8	3 1/8	6 5/8	4 3/4	9 1/8	5 3/4	3 3/16	1	2	1/4 x 1/8 x 1 15/16	2.1885/2.1905	1/2 x 1/4	4 3/16
SMFK-40	4	3/8-16	5	5 3/8	9 1/4	3 7/8	3 1/4	1 1/8	11/16	13 1/8	7 5/8	3 7/8	7 3/4	5 5/16	4 11/16	3 1/2	7 3/4	5 7/16	10 1/2	6 7/16	3 9/16	1 1/8	2 1/16	1/4 x 1/8 x 2	2.438 / 2.440	5/8 x 5/16	4 5/8
SMFK-50	5	1/2-13	5 5/8	7 1/2	11 1/8	4 3/4	3 11/16	1 1/4	13/16	15 3/8	9	4 3/4	8 3/4	5 7/8	5 1/4	4 3/16	8 5/8	6 3/16	12 9/16	7	4 7/16	1 3/8	2 5/16	5/16 x 5/32 x 2 1/4	2.938 / 2.940	3/4 x 3/8	5 9/16
SMFK-60	6	1/2-13	6 1/4	8 5/8	13 3/8	5 3/4	4 1/8	1 3/8	13/16	18 1/8	10 1/2	5 3/4	10 1/4	6 1/2	5 3/4	4 3/4	10 1/16	7 7/16	13 7/16	7 3/4	5	1 1/2	2 11/16	3/8 x 3/16 x 2 5/8	3.438 / 3.440	7/8 x 7/16	6 11/16
SMFK-70	7	1/2-13	6 1/2	9 1/4	14 5/8	6 1/4	5 3/16	1 3/8	15/16	20 1/8	11 3/4	6 1/4	11 1/2	6 3/4	5 7/8	5 1/2	10 3/4	8 1/16	14	8 1/8	5	1 5/8	3 1/8	3/8 x 3/16 x 3 1/16	3.938 / 3.940	1 x 1/2	7 5/16
SMFK-80	8	1/2-13	6 5/8	10 1/2	16 1/2	7	5 3/16	1 1/2	1 1/16	22 1/4	12 3/4	7	12 1/2	7 1/4	6 1/4	6 1/4	11 3/4	9	14 7/8	8 3/4	5 1/8	1 7/8	3 1/8	1/2 x 1/4 x 3 1/16	4.438 / 4.440	1 x 1/2	8 1/4
SMFK-90	9	1/2-13	7 3/4	11 3/8	18 1/2	7 1/8	6 3/16	1 5/8	1 3/16	25	14 3/8	7 7/8	14 1/4	8 1/4	7 1/8	7	13 13/16	10	17	9 7/8	5 7/8	2 1/8	3 15/16	1/2 x 1/4 x 3 7/8	4.938 / 4.940	1 1/4 x 7/16	9 1/4
SMFK-100	10	5/8-11	8 3/4	12 5/8	20 3/4	9	6 3/16	1 3/4	1 3/16	27 1/4	15 1/2	9	15 1/2	9 1/4	8	7 1/2	15 1/8	11 1/4	18 1/2	11	5 3/4	2 1/4	4	1/2 x 1/4 x 3 15/16	5.438 / 5.440	1 1/4 x 7/16	10 3/8
SMFK-120	12	5/8-11	9	14 5/8	24 1/2	10 3/8	6 3/16	2 1/8	1 5/16	32 3/8	18 1/2	10 3/8	18	9 3/4	8 3/8	8	17	13	19 1/2	11 5/8	6 7/8	2 1/2	4 9/16	5/8 x 5/16 x 4 1/2	6.000 / 6.002	1 1/2 x 1/2	12 1/8
SMFK-140	14	5/8-11	10 1/4	16 5/8	27 1/2	12	7 11/16	2 1/4	1 5/16	37 1/2	22	12	21	10 3/4	9	8	20 11/16	14 1/2	21 3/4	13	9 3/16	3	5 5/8	3/4 x 3/8 x 5 5/8	6.000 / 6.002	1 1/2 x 1/2	13 3/4
SMFK-170	17	5/8-11	11 1/2	19 1/2	33	14 1/2	8 3/16	2 1/2	1 9/16	44 3/4	26 1/4	14 1/2	24	12 1/4	10 1/4	9 1/4	22 3/4	17 3/8	24 3/4	14 3/4	10 7/16	3 1/4	6 3/16	3/4 x 3/8 x 6 1/8	6.500 / 6.502	1 1/2 x 1/2	16 1/2
SMFK-200	20	5/8-11	12 3/4	22 1/2	39	17	10 1/4	2 3/4	1 9/16	53	31	17	27 3/8	13 1/2	10 1/2	9 1/4	26	19 1/4	27 1/4	16	11	3 1/2	7	7/8 x 7/16 x 6 15/16	6.500 / 6.502	1 1/2 x 1/2	19 1/2

All dimensions are in inches. Use certified prints for construction. The input shaft may be rotated in either direction. Standard gear sets are cut with right hand threads giving relative shaft rotations as shown above. Shaft arrangements are shown above. Desired assembly should be specified when ordering. Standard keys are furnished with units.

▲ Tolerances: 1½" Diameter or Less = +.0000" -.0005"
Over 1½" Diameter = +.000" -.001"

Low input speeds require special order instructions. See introductory section.

Single Reduction Worm Gear Speed Reducers - Motorized

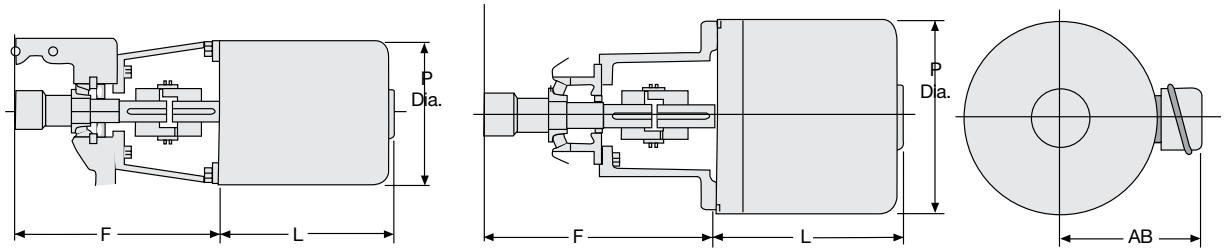

Coupling Assemblies All Unit Types

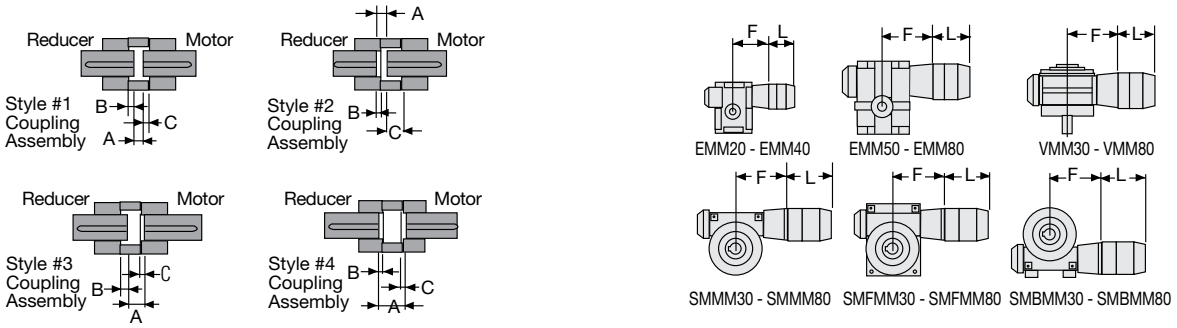

Dimensions - inches single worm reduction units with "C" flange motor. Mounting Dimensions for type EMM - 20 to 40 only.

T.E.F.G. Motor					Unit Size E-20						Unit Size E-25						Unit Size E-30						Unit Size E-35						Unit Size E-40					
Motor Frame	AB	L	P	WT. LBS.	CPLG size	Style Assy	A	B	C	F	CPLG size	Style Assy	A	B	C	F	CPLG size	Style Assy	A	B	C	F	CPLG size	Style Assy	A	B	C	F	CPLG size	Style Assy	A	B	C	F
56C		11 7/16	7 1/8	36	L-090	2	7/16	1/8	3/16	7	L-090	4	5/8	1/16	1/16	8 1/16	L-095	4	3/4	1/8	1/8	8 15/16	L-095	1	1/2	0	0	9 9/16	L-099	1	1/2	1/8	1/8	10 5/16
56CZ		11 7/16	7 1/8	36	L-095	2	1/4	3/16	7/16	7	L-095	1	7/16	1/16	0	8 1/16	L-095	4	9/16	1/32	1/32	8 15/16	L-095	2	5/16	0	3/16	9 9/16	L-099	1	5/16	7/32	7/32	10 5/16
143TC	6	10 3/8	7 1/8	30	L-095	2	3/8	1/4	3/8	7	L-095	4	9/16	1/32	1/32	8 1/16	L-095	4	1 1/16	3/32	3/32	8 15/16	L-095	1	7/16	1/32	1/32	9 9/16	L-099	1	7/16	5/32	5/32	10 5/16
145TC	6	11 3/8	7 1/8	34	L-095	2	3/8	1/4	3/8	7	L-095	4	9/16	1/32	1/32	8 1/16	L-095	4	1 1/16	3/32	3/32	8 15/16	L-095	1	7/16	1/32	1/32	9 9/16	L-099	1	7/16	5/32	5/32	10 5/16
182TC	7	12 3/4	9 3/16	56													L-099	1	9/16	3/16	0	9 5/16	L-099	3	5/16	7/16	0	9 15/16	L-099	1	5/16	7/32	7/32	10 11/16
184TC	7	13 3/4	9 3/16	70													L-099	1	9/16	3/16	0	9 5/16	L-099	3	5/16	7/16	0	9 15/16	L-099	1	5/16	7/32	7/32	10 11/16
213TC	8 13/16	15 3/8	11 1/4	141													L-100	2	7/16	0	5/16	9 5/16	L-100	1	3/16	1/16	1/2	9 15/16	L-100	2	3/16	0	9/16	10 11/16
215TC	8 13/16	16 7/8	11 1/4	176													L-100	2	7/16	0	5/16	9 5/16	L-100	1	3/16	1/16	1/2	9 15/16	L-100	2	3/16	0	9/16	10 11/16
254TC	10 1/16	18 9/16	13 1/2	252																														
256TC	10 1/16	20 5/16	13 1/2	302																														

Dimensions- inches single worm reduction unitwith "C" flange motor.
Mounting dimensions for type VMM 30-80, SMBMM 30-80, SMFMM-30-80, SMMM 30-80, EMM 50-80.

Unit Size 30						Unit Size 35						Unit Size 40						Unit Size 50					
CPLG size	Style Assy	A	B	C	F	CPLG size	Style Assy	A	B	C	F	CPLG size	Style Assy	A	B	C	F	CPLG size	Style Assy	A	B	C	F
L-095	2	5/8	1/8	0	8 13/16	L-095	1	1/2	0	0	9 9/16	L-099	1	7/16	5/16	0	10 1/4						
L-095	3	7/16	1/16	0	8 13/16	L-095	3	5/16	3/16	0	9 9/16	L-099	1	1/4	1/2	0	10 1/4						
L-095	2	9/16	1/16	0	8 13/16	L-095	3	7/16	1/16	0	9 9/16	L-099	1	3/8	3/8	0	10 1/4	L-100	1	1/8	5/8	0	11
L-095	2	9/16	1/16	0	8 13/16	L-095	3	7/16	1/16	0	9 9/16	L-099	1	1/4	1/2	0	10 1/4	L-100	1	1/8	5/8	0	11
L-099	2	7/16	0	5/16	9 3/16	L-099	2	5/16	0	7/16	9 15/16	L-099	1	1/4	1/2	0	10 5/8	L-100	4	1 1/4	1/4	1/4	12 5/8
L-099	2	7/16	0	5/16	9 3/16	L-099	2	5/16	0	7/16	9 15/16	L-099	1	1/4	1/2	0	10 5/8	L-100	4	1 1/4	1/4	1/4	12 5/8
L-100	2	5/16	0	7/16	9 9/16	L-100	2	3/16	0	9/16	10 5/16	L-100	2	1/8	0	5/8	11	L-110	1	3/4	1/8	0	12 5/8
L-100	2	5/16	0	7/16	9 9/16	L-100	2	3/16	0	9/16	10 5/16	L-100	2	1/8	0	5/8	11	L-110	1	3/4	1/8	0	12 5/8
																		L-150	2	1/8	0	7/8	12 5/8
																		L-150	2	1/8	0	7/8	12 5/8

Unit Size 60						Unit Size 70						Unit Size 80					
CPLG size	Style Assy	A	B	C	F	CPLG size	Style Assy	A	B	C	F	CPLG size	Style Assy	A	B	C	F
L-110	4	1 15/16	9/16	1/2	14 13/16	L-110	2	1 5/16	7/16	0	15 7/16	L-150	2	1 1/4	1/4	0	16 3/8
L-110	4	1 15/16	9/16	1/2	14 13/16	L-110	2	1 5/16	7/16	0	15 7/16	L-150	2	1 1/4	1/4	0	16 3/8
L-110	4	1 7/16	5/16	1/4	14 13/16	L-110	1	13/16	1/16	0	15 7/16	L-150	1	3/4	1/4	0	16 3/8
L-110	4	1 7/16	5/16	1/4	14 13/16	L-110	1	13/16	1/16	0	15 7/16	L-150	1	3/4	1/4	0	16 3/8
L-150	1	13/16	3/16	0	14 13/16	L-150	1	3/16	5/16	1/2	15 7/16	L-150	1	1/8	7/16	7/16	16 3/8
L-150	1	13/16	3/16	0	14 13/16	L-150	1	3/16	5/16	1/2	15 7/16	L-150	1	1/8	7/16	7/16	16 3/8

*Motor dimensions will vary slightly with make of motors. Dimensions shown are for totally enclosed fan cooled motor. Open, drip proof or totally enclosed motors may be furnished.

Delroyd Helical Worm Speed Reducers

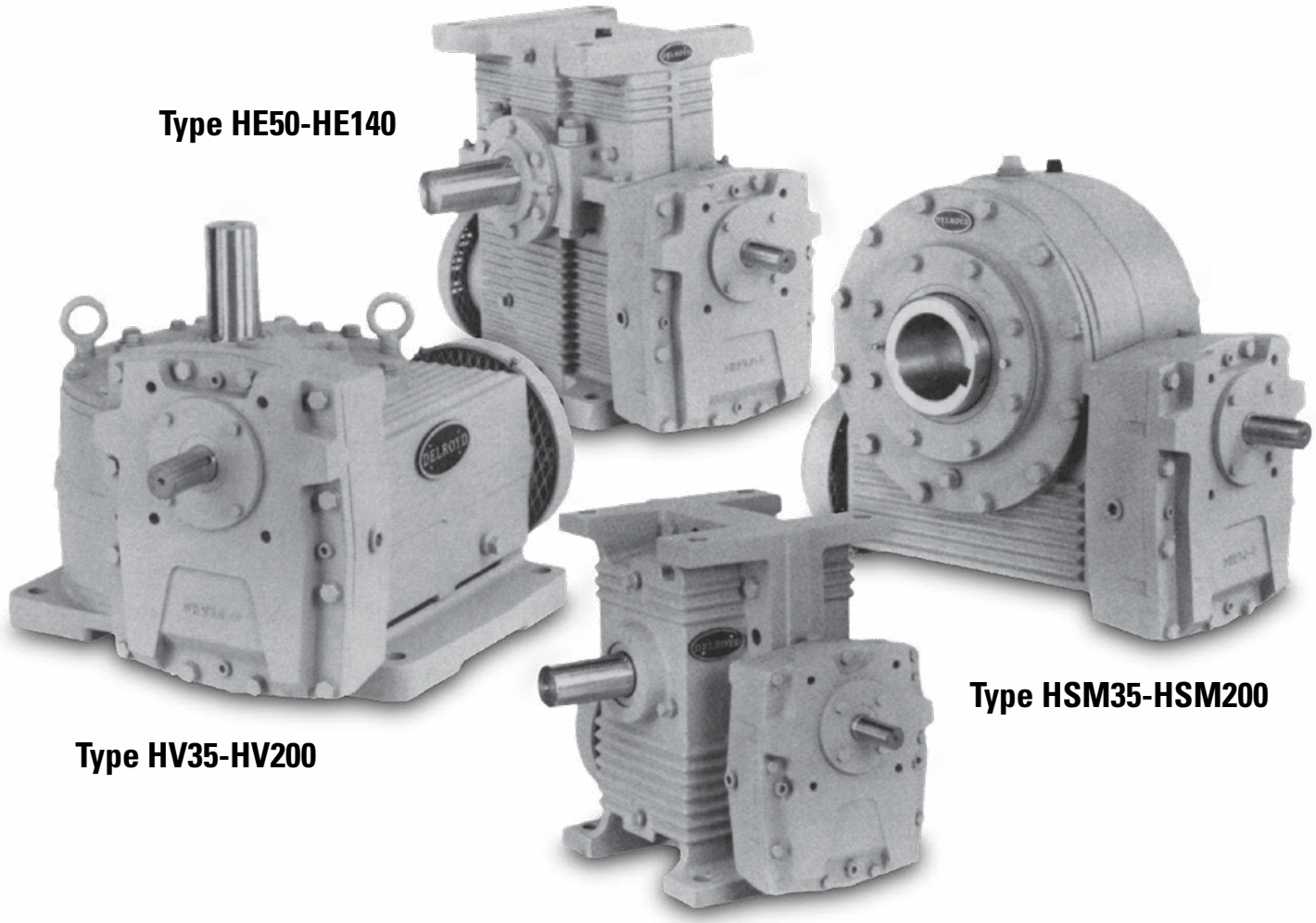

Type HE50-HE140

Type HV35-HV200

Type HSM35-HSM200

Type HE35-HE40

Horsepower and Torque Ratings • Helical Worm

INPUT SPEED (RPM)	Unit Size	35	40	50	60	70	80	90	100	120	140	170	200
	Center Distance	3.5	4	5	6	7	8	9	10	12	14	17	20
	Total Actual Ratio	15.75	15.74	15.66	15.57	15.55	15.56	15.55	15.58	15.53	15.50	15.45	15.45
	Ratio Combinations	3.05 5-1/6	3.04 5-1/6	3.04 5-1/6	3.04 5-1/8	3.03 5-1/8	3.04 5-1/8	3.03 5-1/8	3.04 5-1/8	3.04 5-1/9	3.04 5 -1/10	3.04 5-1/10	3.04 5-1/10
1750	Mech. Input HP	6.26	8.80	14.6	21.6	32.0	44.3	56.7	73.0	108	144	252	350
	Out.Torq., in.lbs.	3180	4450	7380	11000	16400	22600	29200	38000	56000	75500	131000	185000
	Therm. Input HP	4.83	6.31	12.0	18.3	25.6	32.5	40.6	54.8	72.0	101	134	175
	Output RPM	111	111	112	112	113	112	113	112	113	113	113	113
	Efficiency%	89.6	89.2	89.6	90.8	91.5	91.0	92.0	92.8	92.7	93.9	93.4	95.0
1450	Mech. Input HP	546	7.95	13.0	19.5	29.2	41.0	52.2	68.2	98.5	125	218	288
	Out.Torq., in.lbs.	3330	4860	7880	11900	18000	25000	32800	42700	61200	79000	137000	180000
	Therm. Input HP	4.33	5.54	10.6	16.0	22.6	28.6	35.6	48.4	63.6	82.5	121	156
	Output RPM	92.1	92.1	92.6	93.1	93.2	93.2	93.2	93.1	93.4	93.5	93.9	93.9
	Efficiency%	89.1	89.4	89.1	90.2	91.2	90.2	93.0	92.5	92.0	93.8	93.6	93.1
1150	Mech. Input HP	4.60	6.50	12.0	16.6	25.4	35.5	46.8	62.8	87.8	104	187	247
	Out.Torq., in.lbs.	3510	4940	9170	12700	19800	27400	36400	48500	68200	82000	147000	195000
	Therm. Input HP	3.76	4.78	9.07	13.7	19.4	24.0	30.7	41.7	54.7	74.0	104	134
	Output RPM	73.0	73.1	73.4	73.9	74.0	73.9	74.0	73.8	74.1	74.2	74.4	74.4
	Efficiency%	88.4	88.1	89.0	89.7	91.5	90.5	91.3	90.4	91.3	92.8	92.8	93.2
865	Mech. Input HP	3.64	5.16	9.18	13.6	21.0	29.3	39.0	50.0	76.0	80.0	155	191
	Out.Torq., in.lbs.	3630	5150	9180	13600	21200	30000	40000	52000	77800	83300	160000	198000
	Therm. Input HP	3.11	4.04	7.52	11.4	16.2	20.5	29.2	35.6	46.1	60.0	87.5	117.0
	Output RPM	54.9	55.0	55.2	55.6	55.6	55.6	55.6	55.5	55.7	55.8	56.0	56.0
	Efficiency %	86.9	87.0	87.6	88.1	89.1	90.3	90.5	91.6	90.5	92.2	91.7	92.1
575	Mech. Input HP	2.62	3.70	6.79	10.1	15.6	22.5	29.2	38.3	57.0	57.0	125	133
	Out.Torq., in.lbs.	3860	5480	10100	15000	23300	34600	44500	59700	88200	88200	194000	207000
	Therm. Input HP	2.35	3.19	5.80	8.75	12.7	16.7	21.4	29.1	47.3	37.2	72.0	94.5
	Output RPM	36.5	36.5	36.7	36.9	37.0	37.0	37.0	36.9	37.0	37.1	37.2	37.2
	Efficiency%	85.3	85.8	86.7	87.0	87.6	90.2	89.4	91.3	90.9	91.1	91.6	91.9
300	Mech. Input HP	1.41	2.09	3.72	5.76	8.80	12.6	17.2	22.8	34.6	34.6	75.0	75.0
	Out.Torq., in.lbs.	3990	5830	10500	16100	24800	35500	48800	64900	98400	98400	217000	217000
	Therm. Input HP	1.41	2.09	3.72	5.76	8.80	12.6	17.2	17.2	28.6	31.3	56.5	75.0
	Output RPM	19.0	19.1	19.2	19.3	19.3	19.3	19.3	19.3	19.3	19.4	19.4	19.4
	Efficiency %	85.5	84.4	85.8	85.5	86.3	86.2	86.8	87.0	87.2	87.3	89.1	89.1

INPUT SPEED (RPM)	Unit Size	35	40	50	60	70	80	90	100	120	140	170	200
	Center Distance	3.5	4	5	6	7	8	9	10	12	14	17	20
	Total Actual Ratio	20.99	20.97	20.91	20.74	20.95	20.73	20.70	20.70	20.69	20.64	20.59	20.59
	Ratio Combinations	4.06 5-1/6	4.06 5-1/6	4.05 5-1/6	4.05 5-1/8	4.09 5-1/8	4.04 5-1/8	4.04 5-1/8	4.05 5-1/8	4.05 5-1/9	4.05 5-1/10	4.04 5-1/10	4.04 5-1/10
1750	Mech. Input HP	5.10	7.10	12.2	18.1	26.6	38.2	50.3	65.2	93.5	120	205	260
	Out.Torq., in.lbs.	3420	4780	8210	12200	18300	26000	34400	44500	64500	83800	142000	180000
	Therm. Input HP	4.08	5.20	9.87	14.9	21.2	26.4	33.5	45.6	59.6	85.0	115	150
	Output RPM	83.4	83.5	83.7	84.4	83.5	84.4	84.5	84.5	84.3	84.8	85.0	85.0
	Efficiency%	88.7	89.1	89.4	90.2	91.2	91.2	91.7	91.6	92.3	93.9	93.4	93.4
1450	Mech. Input HP	4.41	6.20	10.8	16.0	24.4	33.2	44.2	57.0	85.1	100	180	220
	Out.Torq., in.lbs.	3550	4980	8700	13000	20000	27100	36300	46500	70000	83100	150000	185000
	Therm. Input HP	3.63	4.61	8.75	13.1	18.7	23.2	29.5	40.6	52.8	74.0	103	134
	Output RPM	69.1	69.1	69.3	69.9	69.2	69.9	70.0	70.0	69.8	70.3	70.4	70.4
	Efficiency%	88.2	88.1	88.6	90.1	90.0	90.6	91.3	90.7	91.2	92.6	93.1	94.0
1150	Mech. Input HP	3.64	5.16	9.18	13.6	20.7	28.9	37.5	48.5	73.4	79.0	155	180
	Out.Torq., in.lbs.	3670	5200	9280	13800	21400	29600	39000	50500	76000	81800	160000	189000
	Therm. Input HP	3.10	4.03	9.07	11.3	16.1	20.0	25.8	35.4	46.0	61.0	88.0	116
	Output RPM	54.8	54.8	55.0	55.4	54.9	55.5	55.6	55.6	55.4	55.7	55.9	55.9
	Efficiency%	87.6	87.7	88.2	89.3	90.0	90.2	91.7	91.8	91.0	91.5	91.5	93.1
865	Mech. Input HP	2.89	4.10	7.00	11.0	16.0	22.2	30.0	39.0	58.1	60.0	135	140
	Out.Torq., in.lbs.	3800	5400	9290	14600	21400	30200	41000	54400	83000	85700	185000	193000
	Therm. Input HP	2.57	3.43	6.25	9.49	13.6	17.7	22.5	30.8	39.4	53.0	78.0	102
	Output RPM	41.2	41.2	41.4	41.7	41.3	41.7	41.8	41.8	41.7	41.9	42.0	42.0
	Efficiency %	86.0	86.2	87.1	87.8	87.6	90.1	90.6	92.5	94.4	95.0	91.3	91.9
575	Mech. Input HP	2.01	2.92	4.90	7.97	11.0	15.0	21.4	27.4	40.7	42.1	92.0	110
	Out.Torq., in.lbs.	3920	5720	9650	15700	22000	30200	43200	55700	84000	86900	187000	225000
	Therm. Input HP	1.90	2.65	4.75	7.25	10.7	13.9	19.2	25.8	32.6	40.7	65.0	88.5
	Output RPM	27.4	27.4	27.5	27.7	27.4	27.7	27.8	27.8	27.7	27.9	27.9	27.9
	Efficiency%	84.8	85.2	85.9	86.7	87.1	88.6	89.0	89.6	90.7	91.2	90.1	90.6
300	Mech. Input HP	1.13	1.62	2.90	4.50	6.90	9.96	13.6	18.0	27.4	41.7	72.4	104
	Out.Torq., in.lbs.	4170	6000	10800	16800	26100	37500	51600	68600	105000	160000	266000	389000
	Therm. Input HP	1.05	1.57	2.79	4.32	6.58	9.40	12.9	17.1	21.8	21.8	51.5	51.5
	Output RPM	14.3	14.3	14.3	14.5	14.3	14.5	14.5	14.5	14.5	14.5	14.6	14.6
	Efficiency %	83.7	84.1	84.8	85.7	85.9	86.5	87.2	87.6	87.9	88.5	84.9	86.5

Ratings based on 1.0 service factor. For A.G.M.A. recommended practice on service factors, see page 11.

Horsepower and Torque Ratings • Helical Worm

INPUT SPEED (RPM)	Unit Size	35	40	50	60	70	80	90	100	120	140	170	200
	Center Distance	3.5	4	5	6	7	8	9	10	12	14	17	20
	Total Actual Ratio	22.09	22.08	21.97	22.48	22.45	22.46	22.23	22.28	22.27	22.57	22.51	22.51
	Ratio Combinations	3.05 7-1/4	3.04 7-1/4	3.04 7-1/4	3.04 7-2/5	3.03 7-2/5	3.04 7-2/5	3.03 7-2/6	3.04 7-2/6	3.04 7-2/6	3.04 7-3/7	3.04 7-3/7	3.04 7-3/7
1750	Mech. Input HP	4.81	6.71	11.9	17.6	26.0	36.5	47.0	59.6	90.6	113	185	278
	Out.Torq., in.lbs.	3360	4720	8460	12900	19200	26600	34600	44000	67000	86000	140000	210000
	Therm. Input HP	4.41	5.75	10.9	16.6	23.5	29.6	36.7	49.6	65.6	95.0	129	162
	Output RPM	79.2	79.3	79.7	77.8	78.0	77.9	78.7	78.5	78.6	77.5	77.7	77.7
	Efficiency%	87.8	88.5	89.9	90.5	91.3	90.1	92.0	92.0	92.2	93.6	93.3	93.2
1450	Mech. Input HP	4.16	5.87	10.6	15.7	23.6	32.9	43.3	55.0	84.0	105	163	242
	Out.Torq., in.lbs.	3490	4940	9000	13800	20800	29200	38200	49000	75000	96000	148000	220000
	Therm. Input HP	3.92	5.05	9.57	14 .6	20.7	26.0	32.2	43.7	57.8	82.5	113	141
	Output RPM	65.6	65.7	66.0	64.5	64.6	64.6	65.2	65.1	65.1	64.2	64.4	64.4
	Efficiency%	87.4	87.7	88.9	90.0	90.3	90.9	91.3	92.0	92.2	93.2	92.8	92.9
1150	Mech. Input HP	3.45	4.95	8.98	13.4	20.0	28.6	37.5	49.0	74.8	94.5	143	208
	Out.Torq., in.lbs.	3620	5200	9580	14800	22200	31800	41600	54500	84000	108000	163000	237000
	Therm. Input HP	3.39	4.30	8.22	12.5	17.7	22.0	27.7	37.4	49.6	71.0	97.5	125
	Output RPM	52.1	52.1	52.3	51.2	51.2	51.2	51.7	51.6	51.6	51.0	51.1	51.1
	Efficiency%	86.7	86.8	88.6	89.6	90.2	90.3	91.1	91.1	92.0	92.4	92.4	92.4
865	Mech. Input HP	2.77	3.90	7.12	10.9	16.6	23.3	31.2	41.1	63.0	79.0	124	176
	Out.Torq., in.lbs.	3840	5420	9930	15700	24000	34200	45200	60000	94000	120000	187000	263000
	Therm. Input HP	2.72	3.67	6.78	10.3	14.7	18.5	23.4	31.4	41.6	58.0	78.0	106
	Output RPM	39.2	39.2	39.4	38.5	38.5	38.5	38.9	38.8	·38.8	38.3	38.4	38.4
	Efficiency %	86.1	86.4	87.1	87.9	88.4	89.7	89.4	89.9	92.0	92.4	92.3	91.1
575	Mech. Input HP	1.94	2.80	5.21	7.86	12.1	17. 1	22.5	29.8	47.5	56.3	94.8	133
	Out.Torq., in.lbs.	3980	5760	10700	16700	25700	38000	49600	66000	106000	128000	215000	296000
	Therm. Input HP	1.93	2.77	5.08	7.62	11.1	14.6	18.5	24.6	33.3	45.0	65.0	88.5
	Output RPM	26.0	26.0	26.2	25.6	25.6	25.6	25.9	25.8	25.8	25.5	25.5	25.5
	Efficiency%	84.7	85.0	85.3	86.2	86.3	90.3	90.5	90.7	91.4	91.9	91.9	90.2
300	Mech. Input HP	1.06	1.55	2.88	4.46	6.82	9.87	13.5	17.9	28.9	34.0	63.4	81.0
	Out.Torq., in.lbs.	4130	6030	11200	17800	27600	39900	54100	72300	118000	143000	266000	332000
	Therm. Input HP	1.06	1.55	2.88	4.46	6.82	9.87	13.5	17.9	28.9	31.3	53.0	70.0
	Output RPM	13.6	13.6	13.7	13.3	13.4	13.4	13.5	13.5	13.5	13.3	13.3	13.3
	Efficiency %	84.0	83.9	84.3	84.5	85.8	85.7	85.8	86.3	87.3	88.7	88.7	86.7

INPUT SPEED (RPM)	Unit Size	35	40	50	60	70	80	90	100	120	140	170	200
	Center Distance	3.5	4	5	6	7	8	9	10	12	14	17	20
	Total Actual Ratio	26.20	25.67	26.14	25.93	25.89	25.89	25.88	25.28	25.85	25.80	25.73	25.73
	Ratio Combinations	5.07 5-1/6	5.07 5-1/6	5.06 5-1/6	5.06 5-1/8	5.05 5-1/8	5.05 5-1/8	5.05 5-1/8	4.93 5-1/8	5.06 5-1/9	4.05 6-5/8	5.05 5-1/10	3.52 7-3/7
1750	Mech. Input HP	4.29	5.94	10.1	15.7	23.4	32.4	42.7	61.0	75.2	110	172	225
	Out.Torq., in.lbs.	3560	4830	8430	13200	19700	27400	36200	45400	65300	95300	150000	199000
	Therm. Input HP	3.54	4.52	8.56	12.9	18.3	22.8	29.1	40.0	52.0	72.5	100	134
	Output RPM	66.8	68.2	66.9	67.5	67.6	67.6	67.6	69.2	67.7	67.8	68.0	68.0
	Efficiency%	87.9	88.0	88.7	90.0	90.3	90.7	91.0	92.8	93.3	93.6	94.1	95.4
1450	Mech. Input HP	3.67	4.90	8.30	13.5	19.6	27.3	36.2	54.7	70.2	92.8	151	205
	Out.Torq., in.lbs.	3660	4800	8310	13500	19700	27800	37000	48200	73100	96600	157000	218000
	Therm. Input HP	3.14	4.05	7.56	11.4	16.3	20.3	26.0	35.7	46.6	62.5	91.0	119
	Output RPM	55.3	56.5	55.5	55.9	56.0	56.0	56.0	57.4	56.1	56.2	56.4	56.4
	Efficiency%	87.6	87.8	88.1	88.7	89.3	90.5	90.9	91.0	92.7	92.8	93.0	95.1
1150	Mech. Input HP	3.03	4.05	6.65	11.2	15.8	22.6	29.5	49.6	62.5	75.9	139	187
	Out.Torq., in.lbs.	3780	4960	8320	14000	19900	29000	37900	55000	81400	98800	181000	250000
	Therm. Input HP	2.67	3.56	6.52	9.9	14.1	17.7	23.1	31.6	40.7	54.0	79.0	106
	Output RPM	43.9	44.8	44.0	44.4	44.4	44.4	44.4	45.5	44.5	44.6	44.7	44.7
	Efficiency%	86.9	87.1	87.3	88.0	88.8	90.4	90.6	90.8	91.9	92.1	92.3	94.8
865	Mech. Input HP	2.39	3.09	5.10	8.30	12.0	16.5	22.5	37.4	47.8	59.3	105	166
	Out.Torq., in.lbs.	3910	4960	8460	13700	19800	28000	38300	55400	82200	102000	181000	292000
	Therm. Input HP	2.18	3.01	5.10	8.24	12.0	15.9	20.5	27.8	35.4	45.0	72.0	92.5
	Output RPM	33.0	33.7	33.1	33.4	33.4	33.4	33.4	34.2	33.5	33.5	33.6	33.6
	Efficiency %	85.7	85.8	87.1	87.4	87.5	90.0	90.3	91.2	91.3	91.5	92.0	93.8
575	Mech. Input HP	1.62	2.15	3.73	5.91	8.50	11.3	15.0	25.7	34.0	43.0	75.5	121
	Out.Torq., in.lbs.	3920	5120	9250	14600	21000	27900	37000	54900	84400	107000	190000	317000
	Therm. Input HP	1.60	2.15	3.73	5.90	8.50	11.3	17.9	22.3	30.0	45.0	62.0	67.0
	Output RPM	21.9	22.4	22.0	22.2	22.2	22.2	22.2	22.7	22.2	22.3	22.3	22.3
	Efficiency%	84.3	84.6	86.6	86.9	87.1	87.0	87.0	87.5	87.6	88.0	89.2	92.9
300	Mech. Input HP	0.906	1.33	2.30	3.61	5.61	8.08	11.1	17.1	22.7	36.4	57.5	82.4
	Out.Torq., in.lbs.	4200	6050	10900	17000	26400	38100	52500	69900	108000	173000	274000	404000
	Therm. Input HP	0.860	1.25	1.90	3.10	4.50	6.00	10.3	12.0	17.2	20.7	39.0	39.0
	Output RPM	11.5	11.7	11.5	11.6	11.6	11.6	11.6	11.9	11.6	11.6	11.7	11.7
	Efficiency %	84.2	84.4	86.3	86.4	86.5	86.7	87.0	87.3	87.6	87.7	88.2	90.7

Ratings based on 1.0 service factor. For A.G.M.A. recommended practice on service factors, see page 11.

Horsepower and Torque Ratings • Helical Worm

INPUT SPEED (RPM)	Unit Size	35	40	50	60	70	80	90	100	120	140	170	200
	Center Distance	3.5	4	5	6	7	8	9	10	12	14	17	20
	Total Actual Ratio	29.47	29.45	29.30	29.63	29.59	29.60	29.57	29.64	29.63	29.77	29.70	29.70
	Ratio Combinations	3.05	3.04	3.04	3.04	3.03	3.04	3.03	3.04	3.04	3.04	3.04	3.04
		9-2/3	9-2/3	9-2/3	9-3/4	9-3/4	9-3/4	9-3/4	9-3/4	9-3/4	9-4/5	9-4/5	9-4/5
1750	Mech. Input HP	4.25	5.67	9.97	14.4	21.6	29.6	39.8	50.2	76.0	95.7	163	239
	Out.Torq., in.lbs.	3890	5230	9290	13700	20800	28600	38800	49500	75000	95000	162000	238000
	Therm. Input HP	3.50	4.49	8.44	13.8	19.5	26.0	33.3	46.4	63.0	90.0	119	163
	Output RPM	59.4	59.4	59.7	59.1	59.1	59.1	59.2	59.0	59.1	58.8	58.9	58.9
	Efficiency%	86.2	87.0	88.3	89.2	90.4	90.6	91.5	92.4	92.5	92.6	92.9	93.1
1450	Mech. Input HP	3.72	4.95	8.81	12.7	20.0	27.0	36.2	46.0	71.5	88.3	147	207
	Out.Torq., in.lbs.	4050	5470	9810	14400	23000	31400	42200	54000	84000	105000	174000	246000
	Therm. Input HP	3.08	3.95	7.42	12.2	17.3	23.0	29.2	41.6	55.0	80.0	106	138
	Output RPM	49.2	49.2	49.5	48.9	49.0	49.0	49.0	48.9	48.9	48.7	48.8	48.8
	Efficiency%	85.0	86.3	87.4	88.0	89.4	90.4	90.7	91.1	91.2	91.9	92.0	92.1
1150	Mech. Input HP	3.12	4.15	7.44	10.9	16.7	23.5	31.5	40.8	64.4	78.7	128	176
	Out.Torq., in.lbs.	4260	5700	10400	15500	24000	33800	45600	59500	94000	117000	190000	262000
	Therm. Input HP	2.62	3.41	6.36	10.4	14.8	19.6	25.2	35.5	46.9	66.0	91.5	110
	Output RPM	39.0	39.0	39.2	38.8	38.9	38.9	38.9	38.8	38.8	38.6	38.7	38.7
	Efficiency%	84.5	85.1	87.1	87.6	88.6	88.7	89.3	89.8	89.9	91.1	91.2	91.5
865	Mech. Input HP	2.47	3.28	5.84	8.80	13.3	19.0	25.6	33.5	52.6	69.3	108	152
	Out.Torq., in.lbs.	4390	5930	10600	16400	25000	35800	49200	65000	104000	136000	212000	300000
	Therm. Input HP	2.13	2.86	5.27	8.54	12.3	16.7	21.1	29.3	39.0	55.0	78.0	98.5
	Output RPM	29.4	29.4	29.5	29.2	29.2	29.2	29.3	29.2	29.2	29.1	29.1	29.1
	Efficiency %	82.8	84.3	85.0	86.3	87.2	87.4	89.2	89.8	91.6	90.5	90.7	91.2
575	Mech. Input HP	1.75	2.33	4.25	6.38	9.63	13.6	18.4	24.4	38.9	56.0	84.6	123
	Out.Torq., in.lbs.	4600	6230	11400	17600	26700	38300	53300	71000	115000	163000	247000	362000
	Therm. Input HP	1.58	2.17	3.96	6.27	9.22	12.6	16.2	22.0	30.9	42.5	65.0	82.5
	Output RPM	19.5	19.5	19.6	19.4	19.4	19.4	19.4	19.4	19.4	19.3	19.4	19.4
	Efficiency%	81.4	82.8	83.5	84.9	85.5	86.8	89.4	89.6	91.0	89.2	89.7	90.4
300	Mech. Input HP	0.960	1.30	2.38	3.56	5.63	7.85	10.9	14.5	23.2	31.3	53.7	75.0
	Out.Torq., in.lbs.	4810	6520	12000	18400	29400	41100	57300	77000	127000	170000	296000	416000
	Therm. Input HP	0.960	1.30	2.38	3.56	5.63	7.85	10.9	14.5	23.2	31.3	51.5	64.5
	Output RPM	10.2	10.2	10.2	10.1	10.1	10.1	10.1	10.1	10.1	10.1	10.1	10.1
	Efficiency %	80.9	81.1	81.9	83.0	84.0	84.2	84.6	85.3	87.9	86.8	88.3	88.9

INPUT SPEED (RPM)	Unit Size	35	40	50	60	70	80	90	100	120	140	170	200
	Center Distance	3.5	4	5	6	7	8	9	10	12	14	17	20
	Total Actual Ratio	36.77	36.73	36.68	37.44	37.39	37.39	37.02	36.16	37.08	37.58	37.48	37.48
	Ratio Combinations	5.07	5.07	5.06	5.06	5.05	5.05	5.05	4.93	5.06	5.06	5.05	5.05
		7-1/4	7-1/4	7-1/4	7-2/5	7-2/5	7-2/5	7-2/6	7-2/6	7-2/6	7-3/7	7-3/7	7-3/7
1750	Mech. Input HP	3.16	4.55	8.32	12.6	19.1	27.0	35.7	47.5	72.3	80.8	123	185
	Out.Torq., in.lbs.	3680	5320	9740	15100	23000	32600	42800	56000	87500	98500	150000	228000
	Therm. Input HP	3.19	4.12	7.75	11.7	16.7	20.9	26.3	35.6	47.0	67.5	95.0	121
	Output RPM	47.6	47.6	47.7	46.7	46.8	46.8	47.3	48.4	47.2	46.6	46.7	46.7
	Efficiency%	87.9	88.4	88.6	88.9	89.4	89.7	89.9	90.5	90.6	90.1	90.7	91.3
1450	Mech. Input HP	2.74	3.85	6.95	10.9	16.6	23.5	31.3	42.0	64.7	67.7	128	135
	Out.Torq., in.lbs.	3830	5450	9940	15700	24000	34200	45200	59500	94000	99200	188000	200000
	Therm. Input HP	2.74	3.68	6.81	10.3	14.8	18.6	23.5	31.8	42.0	60.0	85.0	109
	Output RPM	39.4	39.5	39.5	38.7	38.8	38.8	39.2	40.1	39.1	38.6	38.7	38.7
	Efficiency%	87.5	88.7	89.7	88.5	89.0	89.5	89.7	90.1	90.1	89.7	90.5	90.9
1150	Mech. Input HP	2.24	3.19	5.90	9.10	13.7	20.0	26.2	34.7	55.8	55.3	113	128
	Out.Torq., in.lbs.	3920	5670	10500	16600	25000	36500	47500	61500	102000	102000	210000	238000
	Therm. Input HP	2.24	3.16	5.82	8.74	12.7	16.1	20.5	27.4	36.6	50.3	77.0	98.0
	Output RPM	31.3	31.3	31.4	30.7	30.8	30.8	31.1	31.8	31.0	30.6	30.7	30.7
	Efficiency%	86.8	88.3	88.5	88.9	89.1	89.3	89.4	89.6	90.0	89.6	90.2	90.5
865	Mech. Input HP	1.76	2.51	4.67	7.18	10.8	15.9	21.1	27.9	45.0	44.6	94.5	94.3
	Out.Torq., in.lbs.	4010	5850	11000	17300	26100	38500	50600	65400	109000	109000	231000	231000
	Therm. Input HP	1.76	2.61	4.70	7.10	10.4	13.6	17.5	23.2	43.9	43.9	66.0	86.0
	Output RPM	23.5	23.6	23.6	23.1	23.1	23.1	23.4	23.9	23.3	23.0	23.1	23.1
	Efficiency %	85.0	87.1	88.1	88.3	88.7	88.9	88.9	89.0	89.7	89.3	89.5	89.7
575	Mech. Input HP	1.20	1.80	3.20	5.03	7.49	10.9	14.7	19.8	31.3	31.3	67.2	67.0
	Out.Torq., in.lbs.	4110	6260	11200	18000	26800	39000	52600	69600	113000	113000	246000	246000
	Therm. Input HP	1.20	1.80	3.28	5.03	7.49	10.5	14.0	18.5	26.5	30.3	58.0	67.0
	Output RPM	15.6	15.7	15.7	15.4	15.4	15.4	15.5	15.9	15.5	15.3	15.3	15.3
	Efficiency%	85.0	86.4	87.1	87.2	87.3	87.7	88.2	88.7	88.8	87.6	89.1	89.4
300	Mech. Input HP	0.674	0.956	1.77	2.74	4.17	6.00	8.20	11.1	17.7	25.0	42.8	63.1
	Out.Torq., in.lbs.	4350	6260	11600	18500	28300	40800	55300	73500	121000	171000	296000	437000
	Therm. Input HP	0.640	0.930	1.73	2.66	4.02	5.82	7.83	10.4	16.7	16.7	38.5	39.0
	Output RPM	8.16	8.17	8.18	8.01	8.02	8.02	8.10	8.30	8.09	7.98	8.00	8.00
	Efficiency %	83.5	84.9	85.0	85.8	86.4	86.6	86.7	87.2	87.8	86.6	87.8	88.0

Ratings based on 1.0 service factor. For A.G.M.A. recommended practice on service factors, see page 11.

Horsepower and Torque Ratings • Helical Worm

INPUT SPEED (RPM)	Unit Size	35	40	50	60	70	80	90	100	120	140	170	200
	Center Distance	3.5	4	5	6	7	8	9	10	12	14	17	20
	Total Actual Ratio	39.27	39.24	39.13	39.46	39.84	39.44	39.39	39.49	39.46	39.67	39.56	39.56
	Ratio Combinations	4.06 $9\text{-}^{2}/_{3}$	4.06 $9\text{-}^{2}/_{3}$	4.05 $9\text{-}^{2}/_{3}$	4.05 $9\text{-}^{3}/_{4}$	4.09 $9\text{-}^{3}/_{4}$	4.04 $9\text{-}^{3}/_{4}$	4.04 $9\text{-}^{3}/_{4}$	4.05 $9\text{-}^{3}/_{4}$	4.05 $9\text{-}^{3}/_{4}$	4.05 $9\text{-}^{4}/_{5}$	4.04 $9\text{-}^{4}/_{5}$	4.04 $9\text{-}^{4}/_{5}$
1750	Mech. Input HP	3.44	4.59	8.23	11.9	18.5	25.6	34.6	43.6	67.8	84.7	136	190
	Out.Torq., in.lbs.	4130	5590	10100	14900	23600	32400	44000	56500	88000	111000	180000	250000
	Therm. Input HP	2.87	3.70	6.95	11.4	16.2	21.3	27.5	39.0	51.4	75.0	100	128
	Output RPM	44.6	44.6	44.7	44.3	43.9	44.4	44.4	44.3	44.3	44.1	44.2	44.2
	Efficiency%	84.9	86.2	87.1	88.1	88.9	89.1	89.6	91.1	91.3	91.7	92.9	92.4
1450	Mech. Input HP	2.99	3.96	7.14	10.5	16.0	22.5	30.3	38.8	61.5	77.6	123	174
	Out.Torq., in.lbs.	4290	5750	10500	15800	24400	34200	46400	60500	96000	122000	194000	275000
	Therm. Input HP	2.52	3.28	6.13	10.0	14.3	19.0	24.3	33.6	45.2	65.0	92.5	115
	Output RPM	36.9	37.0	37.1	36.7	36.4	36.8	36.8	36.7	36.7	36.6	36.7	36.7
	Efficiency%	84.1	85.1	86.5	87.7	88.1	88.7	89.4	90.8	91.0	91.2	91.7	91.9
1150	Mech. Input HP	2.45	3.28	5.87	8.89	13.3	19.0	25.7	33.2	53.0	69.4	108	151
	Out.Torq., in.lbs.	4410	5980	10800	16600	25200	35800	49200	65000	104000	137000	212000	300000
	Therm. Input HP	2.13	2.86	5.27	8.50	12.2	16.6	21.0	29.1	38.9	56.0	80.0	100
	Output RPM	29.3	29.3	29.4	29.1	28.9	29.2	29.2	29.1	29.1	29.0	29.1	29.1
	Efficiency%	83.6	84.8	85.8	86.3	86.8	87.2	88.7	90.5	90.7	90.8	91.0	91.6
865	Mech. Input HP	1.95	2.60	4.70	7.04	10.5	15.1	20.5	26.8	43.2	57.4	90.3	132.0
	Out.Torq., in.lbs.	4570	6190	11300	17300	26400	37600	52000	69500	112000	150000	236000	347000
	Therm. Input HP	1.73	2.36	4.30	6.89	10.1	13.8	17.5	24.0	32.6	46.7	69.5	88.0
	Output RPM	22.0	22.0	22.1	21.9	21.7	21.9	22.0	21.9	21.9	21.8	21.9	21.9
	Efficiency %	81.9	83.3	84.3	85.5	86.6	86.7	88.4	90.1	90.2	90.4	90.7	91.2
575	Mech. Input HP	1.33	1.83	3.28	5.00	7.48	10.6	14.6	19.3	31.5	40.5	69.5	93.5
	Out.Torq., in.lbs.	4660	6440	11600	18200	27600	39700	55200	74000	121000	157000	270000	368000
	Therm. Input HP	1.28	1.74	3.16	4.90	7.29	10.1	13.4	18.0	26.6	37.8	59.0	73.0
	Output RPM	14.6	14.7	14.7	14.6	14.4	14.6	14.6	14.6	14.6	14.5	14.5	14.5
	Efficiency%	81.4	81.8	82.5	84.2	84.5	86.6	87.6	88.6	88.8	89.2	89.6	90.8
300	Mech. Input HP	0.736	0.980	1.81	2.72	4.22	5.95	8.15	10.8	17.6	26.0	42.9	61.8
	Out.Torq., in.lbs.	4920	6600	12200	18800	29600	41400	57600	77000	127000	187000	312000	452000
	Therm. Input HP	0.720	0.980	1.78	2.66	4.22	5.90	8.12	10.8	18.0	21.8	40.7	51.5
	Output RPM	7.64	7.65	7.67	7.60	7.53	7.61	7.62	7.60	7.60	7.56	7.58	7.58
	Efficiency %	81.0	81.7	82.0	83.4	83.8	84.0	85.4	85.9	87.0	86.3	87.5	88.0

INPUT SPEED (RPM)	Unit Size	35	40	50	60	70	80	90	100	120	140	170	200
	Center Distance	3.5	4	5	6	7	8	9	10	12	14	17	20
	Total Actual Ratio	47.24	47.21	46.97	44.57	44.52	44.53	44.50	44.59	44.57	44.81	44.70	44.70
	Ratio Combinations	3.05 $15\text{-}^{1}/_{2}$	3.04 $15\text{-}^{1}/_{2}$	3.04 $15\text{-}^{1}/_{2}$	3.04 $14\text{-}^{2}/_{3}$	3.03 $14\text{-}^{2}/_{3}$	3.04 $14\text{-}^{2}/_{3}$	3.03 $14\text{-}^{2}/_{3}$	3.04 $14\text{-}^{2}/_{3}$	3.04 $14\text{-}^{2}/_{3}$	3.04 $14\text{-}^{3}/_{4}$	3.04 $14\text{-}^{3}/_{4}$	3.04 $14\text{-}^{3}/_{4}$
1750	Mech. Input HP	3.08	4.03	6.86	10.8	16.3	23.2	29.0	39.0	56.5	70.3	108	171
	Out.Torq., in.lbs.	4280	5710	9930	15000	22800	32600	40800	55500	82000	104000	160000	262000
	Therm. Input HP	2.69	3.52	5.96	10.3	14.3	19.4	25.8	34.4	51.2	70.3	103	138
	Output RPM	37.0	37.1	37.3	39.3	39.3	39.3	39.3	39.2	39.3	39.1	39.1	39.1
	Efficiency%	81.7	83.3	85.6	86.5	87.2	87.6	87.8	88.6	90.4	91.7	92.0	95.2
1450	Mech. Input HP	2.67	3.54	6.04	9.50	14.5	20.6	26.0	35.4	53.2	66.4	100	162
	Out.Torq., in.lbs.	4420	6000	10400	15600	24000	34200	44000	60000	91000	117000	178000	287000
	Therm. Input HP	2.35	3.11	5.22	9.09	12.6	17.3	22.8	30.4	46.0	66.4	94.0	125
	Output RPM	30.7	30.7	30.9	32.5	32.6	32.6	32.6	32.5	32.5	32.4	32.4	32.4
	Efficiency%	80.6	82.6	84.3	84.8	85.5	85.8	87.5	87.5	88.3	90.5	91.6	91.2
1150	Mech. Input HP	2.24	2.98	5.10	8.15	12.4	17.6	22.4	30.6	47.4	60.0	91.5	135
	Out.Torq., in.lbs.	4630	6310	11000	16800	25700	36800	47000	65500	101000	132000	202000	300000
	Therm. Input HP	1.99	2.70	4.52	7.80	10.7	14.7	19.6	25.8	39.4	58.5	79.0	107
	Output RPM	24.3	24.4	24.5	25.8	25.8	25.8	25.8	25.8	25.8	25.7	25.7	25.7
	Efficiency%	79.8	81.8	83.8	84.4	84.9	85.7	86.0	87.0	87.2	89.6	90.1	90.7
865	Mech. Input HP	1.77	2.35	4.09	6.49	9.90	14.0	18.0	25.2	39.5	51.0	81.0	112
	Out.Torq., in.lbs.	4750	6500	11500	17700	27200	38800	50000	71000	112000	147000	235000	330000
	Therm. Input HP	1.61	2.26	3.74	6.34	8.92	12.1	16.0	21.3	32.6	48.3	66.0	90.0
	Output RPM	18.3	18.3	18.4	19.4	19.4	19.4	19.4	19.4	19.4	19.3	19.4	19.4
	Efficiency %	78.0	80.4	82.2	84.0	84.7	85.4	85.7	86.7	87.3	88.3	89.1	90.5
575	Mech. Input HP	1.26	1.66	2.89	4.80	7.10	10.1	12.7	19.0	29.0	39.3	65.0	92
	Out.Torq., in.lbs.	4960	6650	12000	19600	29000	41500	53000	79900	123000	168000	278000	395000
	Therm. Input HP	1.19	1.66	2.77	4.63	6.68	9.10	11.7	16.0	24.7	39.3	57.0	77.0
	Output RPM	12.2	12.2	12.2	12.9	12.9	12.9	12.9	12.9	12.9	12.8	12.9	12.9
	Efficiency%	76.0	77.4	80.7	83.6	83.7	84.2	85.6	86.0	86.8	87.0	87.3	87.6
300	Mech. Input HP	0.700	0.930	1.60	2.66	4.07	5.85	7.15	11.2	17.5	23.7	39.2	58.0
	Out.Torq., in.lbs.	5180	7000	12400	19800	30800	44400	55500	83200	135000	188000	313000	472000
	Therm. Input HP	0.700	0.930	1.60	2.66	4.07	5.85	7.15	10.9	17.5	23.7	39.2	58.0
	Output RPM	6.35	6.35	6.39	6.73	6.74	6.74	6.74	6.73	6.73	6.69	6.71	6.71
	Efficiency %	74.6	75.9	78.5	79.5	80.9	81.1	83.0	79.3	82.4	84.3	85.0	86.7

Ratings based on 1.0 service factor. For A.G.M.A. recommended practice on service factors, see page 11.

Horsepower and Torque Ratings • Helical Worm

INPUT SPEED (RPM)	Unit Size	35	40	50	60	70	80	90	100	120	140	170	200
	Center Distance	3.5	4	5	6	7	8	9	10	12	14	17	20
	Total Actual Ratio	49.04	48.99	48.92	49.32	49.26	49.26	49.24	48.10	49.32	49.58	49.44	49.44
	Ratio Combinations	5.07 $9\text{-}^{2}/_{3}$	5.07 $9\text{-}^{2}/_{3}$	5.06 $9\text{-}^{2}/_{3}$	5.06 $9\text{-}^{3}/_{4}$	5.05 $9\text{-}^{3}/_{4}$	5.05 $9\text{-}^{3}/_{4}$	5.05 $9\text{-}^{3}/_{4}$	4.93 $9\text{-}^{3}/_{4}$	5.06 $9\text{-}^{3}/_{4}$	5.06 $9\text{-}^{4}/_{5}$	5.05 $9\text{-}^{4}/_{5}$	5.05 $9\text{-}^{4}/_{5}$
1750	Mech. Input HP	2.89	3.86	6.91	10.2	15.7	21.9	30.0	39.8	61.0	76.2	120	166
	Out.Torq., in.lbs.	4310	5820	10500	15900	24500	34400	47200	61500	97000	124000	196000	272000
	Therm. Input HP	2.46	3.23	6.01	9.78	14.0	18.6	24.0	33.8	44.4	63.5	87.5	113
	Output RPM	35.7	35.7	35.8	35.5	35.5	35.5	35.5	36.4	35.5	35.3	35.4	35.4
	Efficiency%	84.4	85.5	86.2	87.8	88.0	88.5	88.7	89.2	89.5	91.1	91.7	92.0
1450	Mech. Input HP	2.48	3.31	5.90	8.80	13.4	19.0	26.0	35.0	54.0	68.3	109	151
	Out.Torq., in.lbs.	4400	5950	10700	16300	25200	35800	49200	65000	104000	133000	212000	296000
	Therm. Input HP	2.15	2.88	5.29	8.57	12.3	16.8	21.1	29.8	39.4	57.5	81.5	103
	Output RPM	29.6	29.6	29.6	29.4	29.4	29.4	29.4	30.1	29.4	29.2	29.3	29.3
	Efficiency%	83.2	84.4	85.3	86.4	87.8	88.0	88.4	88.8	89.8	90.4	90.5	91.2
1150	Mech. Input HP	2.04	2.73	4.93	7.42	11.1	15.7	21.7	29.4	45.8	54.5	95.0	126
	Out.Torq., in.lbs.	4540	6150	11200	17300	26100	37200	51600	68500	110000	133000	232000	308000
	Therm. Input HP	1.81	2.46	4.52	7.22	10.5	14.4	18.1	25.0	34.0	49.0	70.0	91.5
	Output RPM	23.5	23.5	23.5	23.3	23.3	23.3	23.4	23.9	23.3	23.2	23.3	23.3
	Efficiency%	82.8	83.9	84.7	86.3	87.1	87.8	88.1	88.4	89.0	89.8	90.1	89.9
865	Mech. Input HP	1.60	2.16	3.93	5.92	8.90	12.6	17.5	23.7	37.0	42.5	79.0	103
	Out.Torq., in.lbs.	4650	6390	11700	18000	27200	38800	54100	72000	118000	137000	254000	334000
	Therm. Input HP	1.47	2.01	3.67	5.81	8.62	11.8	15.1	20.5	29.2	41.0	64.0	86.5
	Output RPM	17.6	17.7	17.7	17.5	17.6	17.6	17.6	18.0	17.5	17.4	17.5	17.5
	Efficiency %	81.3	82.9	83.5	84.6	85.2	85.8	86.2	86.7	88.7	89.2	89.3	89.7
575	Mech. Input HP	1.09	1.47	2.65	4.08	6.15	8.80	12.3	16.7	26.7	30.3	59.7	74.7
	Out.Torq., in.lbs.	4750	6450	11700	18400	28200	40600	56800	76000	125000	144000	286000	360000
	Therm. Input HP	1.08	1.47	2.65	4.04	5.97	8.62	11.6	15.4	24.1	30.3	53.0	67.0
	Output RPM	11.7	11.7	11.8	11.7	11.7	11.7	11.7	12.0	11.7	11.6	11.6	11.6
	Efficiency%	81.1	81.7	82.3	83.4	84.9	85.4	85.6	86.3	86.6	87.5	88.4	89.0
300	Mech. Input HP	0.598	0.794	1.46	2.20	3.38	4.77	6.62	8.96	14.4	21.1	36.4	50.6
	Out.Torq., in.lbs.	4960	6630	12300	19000	29600	42000	58300	77500	128000	191000	330000	465000
	Therm. Input HP	0.580	0.780	1.42	2.13	3.38	4.70	6.50	8.73	14.3	15.9	36.4	39.0
	Output RPM	6.12	6.12	6.13	6.08	6.09	6.09	6.09	6.24	6.08	6.05	6.07	6.07
	Efficiency %	80.5	81.1	82.0	83.4	84.6	85.1	85.1	85.6	85.8	86.9	87.3	88.5

INPUT SPEED (RPM))	Unit Size	35	40	50	60	70	80	90	100	120	140	170	200
	Center Distance	3.5	4	5	6	7	8	9	10	12	14	17	20
	Total Actual Ratio	62.97	62.91	62.74	59.27	59.94	59.33	59.25	59.40	59.37	59.70	59.54	59.54
	Ratio Combinations	4.06 $15\text{-}^{1}/_{2}$	4.06 $15\text{-}^{1}/_{2}$	4.05 $15\text{-}^{1}/_{2}$	4.05 $14\text{-}^{2}/_{3}$	4.09 $14\text{-}^{2}/_{3}$	4.04 $14\text{-}^{2}/_{3}$	4.04 $14\text{-}^{2}/_{3}$	4.05 $14\text{-}^{2}/_{3}$	4.05 $14\text{-}^{2}/_{3}$	4.05 $14\text{-}^{3}/_{4}$	4.04 $14\text{-}^{3}/_{4}$	4.04 $14\text{-}^{3}/_{4}$
1750	Mech. Input HP	2.48	3.70	5.64	8.87	13.3	19.3	24.4	33.6	51.5	64.0	96.8	146
	Out.Torq., in.lbs.	4510	6780	10700	16300	24800	35600	45200	62500	96000	124000	188000	287000
	Therm. Input HP	2.19	2.93	4.91	8.50	11.8	16.0	21.4	28.4	43.2	64.0	87.6	119
	Output RPM	27.8	27.8	27.9	29.5	29.2	29.5	29.5	29.5	29.5	29.3	29.4	29.4
	Efficiency%	80.2	80.9	84.0	86.1	86.4	86.6	86.8	87.0	87.2	90.1	90.6	91.7
1450	Mech. Input HP	2.15	2.84	4.90	7.75	11.7	16.9	21.5	29.9	46.4	58.1	89.0	130
	Out.Torq., in.lbs.	4670	6320	11200	16900	26000	37200	47600	67000	104000	135000	208000	305000
	Therm. Input HP	1.91	2.61	4.35	7.50	10.4	14.2	18.8	25.0	38.0	58.1	78.6	106
	Output RPM	23.0	23.0	23.1	24.5	24.2	24.4	24.5	24.4	24.4	24.3	24.4	24.4
	Efficiency%	79.4	81.4	83.8	84.6	85.3	85.4	86.0	86.8	86.9	89.5	90.3	90.7
1150	Mech. Input HP	1.77	2.33	4.09	6.48	9.79	14.1	17.9	25.5	40.4	51.7	79.8	113
	Out.Torq., in.lbs.	4790	6480	11600	17700	27300	39000	50000	71500	114000	148000	234000	332000
	Therm. Input HP	1.60	2.25	3.73	6.32	8.90	12.1	15.9	21.1	32.5	50.0	67.0	860
	Output RPM	18.3	18.3	18.3	19.4	19.2	19.4	19.4	19.4	19.4	19.3	19.3	19.3
	Efficiency%	78.4	80.7	82.5	84.1	84.9	85.1	86.0	86.1	86.7	87.5	89.9	90.0
865	Mech. Input HP	1.40	1.86	3.21	5.14	7.70	11.0	14.2	20.7	32.2	42.7	69.5	98.0
	Out.Torq., in.lbs.	4930	6750	11900	18500	28500	40600	52400	76800	120000	162000	266000	377000
	Therm. Input HP	1.30	1.84	3.02	5.10	7.30	9.90	12.8	17.4	26.8	42.7	60.0	80.5
	Output RPM	13.7	13.7	13.8	14.6	14.4	14.6	14.6	14.6	14.6	14.5	14.5	14.5
	Efficiency %	76.8	79.2	81.1	83.3	84.8	85.4	85.5	85.7	86.2	87.2	88.2	88.7
575	Mech. Input HP	0.970	1.29	2.22	3.68	5.50	7.85	9.90	14.6	23.5	31.9	53.1	766
	Out.Torq., in.lbs.	5050	6820	12100	19400	30000	42800	54400	80500	130000	179000	300000	435000
	Therm. Input HP	0.960	1.29	2.20	3.62	5.38	7.40	9.30	13.1	20.5	31.9	50.7	67.3
	Output RPM	9.13	9.14	9.16	9.70	9.59	9.69	9.70	9.68	9.69	9.63	9.66	9.66
	Efficiency%	75.4	76.7	79.3	81.1	83.0	83.8	84.6	84.7	85.0	85.8	86.6	87.0
300	Mech. Input HP	0.531	0.719	1.23	2.04	3.07	4.76	6.10	8.07	13.2	18.7	31.2	46.0
	Out.Torq., in.lbs.	5290	7190	12800	20200	31100	48000	61800	82400	135000	198000	331000	491000
	Therm. Input HP	0.520	0.700	1.20	1.99	3.05	4.38	5.37	8.15	13.1	17.8	29.5	44.2
	Output RPM	4.76	4.77	4.78	5.06	5.01	5.06	5.06	5.05	5.05	5.03	5.04	5.04
	Efficiency %	75.3	75.7	79.0	79.5	80.4	80.9	81.4	81.8	82.0	84.4	84.8	85.3

Ratings based on 1.0 service factor. For A.G.M.A. recommended practice on service factors, see page 11.

Horsepower and Torque Ratings • Helical Worm

INPUT SPEED (RPM)	Unit Size	35	40	50	60	70	80	90	100	120	140	170	200
	Center Distance	3.5	4	5	6	7	8	9	10	12	14	17	20
	Total Actual Ratio	**78.6**	**78.5**	**78.4**	**74.2**	**74.1**	**74.1**	**74.1**	**72.4**	**74.2**	**74.6**	**74.4**	**74.4**
	Ratio Combinations	5.07 15-1/2	5.07 15-1/2	5.06 15-1/2	5.06 14-2/3	5.05 14-2/3	5.05 14-2/3	5.05 14-2/3	4.93 14-2/3	5.06 14-2/3	5.06 14-3/4	5.05 14-3/4	5.05 14-3/4
1750	Mech. Input HP	2.1	2.8	4.7	7.5	11.5	16.4	20.5	29.4	44.5	57.2	87.5	127
	Out.Torq., in.lbs.	4670	6360	10800	17000	26200	37500	47200	67500	105000	137000	211000	310000
	Therm. Input HP	1.9	2.6	4.3	7.3	10.2	13.9	18.5	24.6	37.4	57.2	79.0	103
	Output RPM	22.3	22.3	22.3	23.6	23.6	23.6	23.6	24.2	23.6	23.5	23.5	23.5
	Efficiency%	79.3	81.1	82.1	84.5	85.3	85.7	86.3	88.1	88.3	89.1	90.0	911
1450	Mech. Input HP	1.79	2.36	4.14	6.52	10.0	14.2	18.2	26.0	39.7	51.5	81.3	113
	Out.Torq., in.lbs.	4800	6500	11500	17600	27200	38800	50000	71300	112000	148000	234000	330000
	Therm. Input HP	1.62	2.26	3.76	6.38	8.98	12.2	16.1	21.6	39.4	51.5	75.0	87.5
	Output RPM	18.4	18.5	18.5	19.5	19.6	19.6	19.6	20.0	19.5	19.4	19.5	19.5
	Efficiency%	78.5	80.7	81.5	83.7	84.4	84.8	85.3	87.2	87.5	88.6	89.0	90.3
1150	Mech. Input HP	1.47	1.95	3.42	5.42	8.34	11.8	15.0	22.0	33.5	44.5	72.7	101.0
	Out.Torq., in.lbs.	4910	6670	11900	18300	28200	40200	51600	75700	119000	159000	260000	367000
	Therm. Input HP	1.36	1.93	3.17	5.35	7.65	10.4	13.4	18.1	27.9	44.0	61.0	83.0
	Output RPM	14.6	14.6	14.7	15.5	15.5	15.5	15.5	15.9	15.5	15.4	15.5	15.5
	Efficiency%	77.5	79.5	81.0	83.0	83.2	83.9	84.7	86.8	87.3	87.4	87.7	89.1
865	Mech. Input HP	1.16	1.55	2.65	4.32	6.65	9.38	11.8	18.0	27.0	36.2	60.3	85.7
	Out.Torq., in.lbs.	5000	6710	12200	19000	29400	42000	53600	81000	125000	171000	286000	410000
	Therm. Input HP	1.1	1.55	2.58	4.3	6.26	8.49	10.8	14.9	23.2	36.2	58.5	75.5
	Output RPM	11.0	11.0	11.0	11.7	11.7	11.7	11.7	12.0	11.7	11.6	11.6	11.6
	Efficiency %	75.3	75.7	80.6	81.3	81.9	82.9	84.2	85.3	85.6	86.9	87.5	88.2
575	Mech. Input HP	0.8	1.07	1.80	3.01	4.6	6.9	8.14	12.4	19.4	26.6	44.0	65.0
	Out.Torq., in.lbs.	5160	6940	12300	19700	30400	46300	55200	82500	133000	185000	308000	460000
	Therm. Input HP	0.8	1.04	1.80	3.01	4.5	6.33	7.8	11.3	17 .8	26.6	44.0	65.0
	Output RPM	7.31	7.32	7.33	7.75	7.76	7.76	7.76	7.95	7.75	7.71	7.73	7.73
	Efficiency%	74.9	75.4	79.5	80.5	81.3	82.6	83.5	83.9	84.5	85.0	85.8	86.8
300	Mech. Input HP	.431	.583	1.0	1.63	2.5	3.85	4.83	8.56	10.5	15.2	25.4	37.7
	Out.Torq., in.lbs.	5310	7240	12900	20400	31400	48600	62600	83400	138000	202000	338000	504000
	Therm. Input HP	.42	.560	.960	1.6	2.45	3.5	4.28	6.53	10.5	14.4	23.8	35.7
	Output RPM	3.82	3.82	3.83	4.04	4.05	4.05	4.05	4.15	4.04	4.02	4.03	4.03
	Efficiency %	74.6	75.3	78.3	80.3	80.7	81.1	83.3	83.6	84.3	84.8	85.1	85.5

INPUT SPEED (RPM)	Unit Size	35	40	50	60	70	80	90	100	120	140	170	200
	Center Distance	3.5	4	5	6	7	8	9	10	12	14	17	20
	Total Actual Ratio	**83.28**	**83.21**	**82.98**	**82.98**	**83.78**	**82.93**	**82.82**	**83.02**	**82.98**	**79.60**	**79.39**	**79.39**
	Ratio Combinations	4.06 20-1/2	4.06 20-1/2	4.05 20-1/2	4.05 20-1/2	4.09 20-1/2	4.04 20-1/2	4.04 20-1/2	4.05 20-1/2	4.05 20-1/2	4.05 19-2/3	4.04 19-2/3	4.04 19-2/3
1750	Mech. Input HP	1.91	2.53	4.46	7.14	10.6	14.8	20.0	26.4	40.0	52.4	76.7	112
	Out.Torq., in.lbs.	4430	5930	10800	17600	26600	37000	50000	66500	101000	129000	194000	290000
	Therm. Input HP	1.83	2.41	4.46	7.13	9.8	13.4	16.8	20.6	32.9	52.4	75.0	109
	Output RPM	21.0	21.0	21.1	21.1	20.9	21.1	21.1	21.1	21.1	22.0	22.0	22.0
	Efficiency%	77.3	78.2	81.0	82.5	83.2	83.7	83.8	84.2	84.5	85.9	88.5	90.6
1450	Mech. Input HP	1.65	2.18	3.89	6.27	9.4	13.1	17.8	23.6	36.1	46.1	71.5	102
	Out.Torq., in.lbs.	4580	6140	11000	18300	27800	39000	53200	71000	109000	139000	21600	315000
	Therm. Input HP	1.60	2.13	3.89	6.2	7.4	11.8	14.7	18.0	29.0	46.1	68.5	96.0
	Output RPM	17.4	17.4	17.5	17.5	13.7	17.5	17.5	17.5	17.5	18.2	18.3	18.3
	Efficiency%	76.7	77.9	78.4	80.9	81.2	82.6	83.0	83.4	83.7	87.1	87.5	89.5
1150	Mech. Input HP	1.37	1.83	3.3	5.25	7.85	10.9	14.9	20.0	30.8	40.2	65.2	90.0
	Out.Torq., in.lbs.	4710	6410	11700	19200	29000	40700	56000	75700	117000	150000	246000	347000
	Therm. Input HP	1.33	1.8	3.25	5.2	7.4	10.0	12.5	15.4	24.9	40.2	57.3	85.5
	Output RPM	13.8	13.8	13.9	13.9	13.7	13.9	13.9	13.9	13.9	14.4	14.5	14.5
	Efficiency%	75.3	76.8	78.0	80.4	80.5	82.2	82.8	83.2	83.5	85.5	86.7	88.6
865	Mech. Input HP	1.03	1.42	2.58	4.19	6.41	8.66	11.9	16.0	24.9	33.4	56.3	78.0
	Out.Torq., in.lbs.	4820	6580	12100	19900	30800	42800	58800	80000	125000	165000	278000	392000
	Therm. Input HP	1.07	1.42	2.58	4.15	6.02	8.07	10.3	12.9	20.7	33.4	51.7	74.5
	Output RPM	10.4	10.4	10.4	10.4	10.3	10.4	10.4	10.4	10.4	10.9	10.9	10.9
	Efficiency %	74.2	76.4	77.6	78.6	78.7	81.8	81.9	82.7	83.0	85.2	85.4	86.9
575	Mech. Input HP	.76	1.0	1.84	2.98	4.5	6.25	8.67	11.7	18.0	25.0	41.8	60.0
	Out.Torq., in.lbs.	5000	6750	12600	20700	31800	45000	62400	85200	134000	182000	306000	445000
	Therm. Input HP	.76	1.0	1.82	2.94	4.38	5.94	7.88	10.4	16.0	25.0	41.8	60.0
	Output RPM	6.9	6.91	6.93	6.93	6.86	6.93	6.94	6.93	6.93	7.2	7.24	7.24
	Efficiency%	72.1	74.0	75.3	76.4	77.0	79.2	79.3	80.0	81.8	83.4	84.1	85.2
300	Mech. Input HP	.407	.554	1.01	1.65	2.48	3.83	4.86	6.5	10.2	15.0	24.9	36.6
	Out.Torq., in.lbs.	5130	7040	13000	21500	32800	50800	65600	88400	139000	203000	338000	502000
	Therm. Input HP	.40	.540	.99	1.62	2.48	3.5	4.83	6.53	10.2	14.3	23.7	35.0
	Output RPM	3.6	3.61	3.62	3.62	3.58	3.62	3.6	3.6	3.62	3.77	3.78	3.78
	Efficiency %	72.0	72.7	73.8	74.7	75.1	76.1	77.6	77.7	78.2	80.9	81.4	82.2

Ratings based on 1.0 service factor. For A.G.M.A. recommended practice on service factors, see page 11.

Horsepower and Torque Ratings • Helical Worm

INPUT SPEED (RPM)	Unit Size	35	40	50	60	70	80	90	100	120	140	170	200
	Center Distance	3.5	4	5	6	7	8	9	10	12	14	17	20
	Total Actual Ratio	91.43	91.37	89.63	89.64	89.52	89.55	89.48	89.68	89.64	89.64	89.39	89.39
	Ratio Combinations	3.05 30	3.04 30	3.04 29-1/2	3.04 29-1/2	3.03 29-1/2	3.04 29-1/2	3.03 29-1/2	3.04 29-1/2	3.04 29-1/2	3.04 29-1/2	3.04 29-1/2	3.04 29-1/2
1750	Mech. Input HP	1.88	2.44	4.05	6.3	9.0	12.5	16.6	21.8	32.3	39.9	65.6	85.5
	Out.Torq., in.lbs.	4460	6010	10200	16200	23600	32800	43600	58500	87000	110000	184000	242000
	Therm. Input HP	1.88	2.44	3.9	6.27	8.69	11.9	15.1	18.4	29.4	39.9	65.6	85.5
	Output RPM	19.1	19.2	19.5	19.5	19.5	19.5	19.6	19.5	19.5	19.5	19.6	19.6
	Efficiency%	72.0	79.4	78.0	79.7	81.3	81.4	81.5	83.1	83.4	85.4	87.1	87.9
1450	Mech. Input HP	1.65	2.15	3.53	5.59	7.93	11.3	15.1	20.0	30.0	37.7	59.5	78.6
	Out.Torq., in.lbs.	4650	6260	10500	17100	24800	35400	47600	63500	97000	124000	200000	268000
	Therm. Input HP	1.65	2.15	3.42	5.58	7.71	10.7	13.4	16.2	27.0	37.2	59.5	78.5
	Output RPM	15.9	15.9	16.2	16.2	16.2	16.2	16.2	16.2	16.2	16.2	16.2	16.2
	Efficiency%	70.9	73.3	76.4	78.5	80.4	80.5	81.1	81.5	83.0	84.4	86.5	87.6
1150	Mech. Input HP	1.38	1.81	3.0	4.78	6.77	9.63	13.0	17.0	26.2	34.0	51.7	73.7
	Out.Torq., in.lbs.	4830	6510	11100	17900	26300	37600	51200	68000	106000	139000	214000	310000
	Therm. Input HP	1.38	1.81	2.92	4.78	6.6	9.23	11.5	13.8	23.9	34.0	51.7	73.7
	Output RPM	12.6	12.6	12.8	12.8	12.8	12.8	12.9	12.8	12.8	12.8	12.9	12.9
	Efficiency%	69.8	71.8	75.3	76.2	79.2	79.6	80.3	81.4	82.4	83.2	84.5	85.9
865	Mech. Input HP	1.09	1.45	2.37	3.81	5.42	7.55	10.4	13.7	21.7	28.7	46.5	64.5
	Out.Torq., in.lbs.	5020	6760	11600	18900	27500	38500	53600	72500	116000	154000	250000	355000
	Therm. Input HP	1.09	1.45	2.37	3.81	5.35	7.55	9.4	11.3	19.9	28.7	46.5	64.5
	Output RPM	9.46	9.47	9.65	9.65	9.66	9.66	9.67	9.65	9.65	9.65	9.68	9.68
	Efficiency %	69.1	70.0	74.9	76.0	77.8	78.2	79.1	81.0	81.8	82.2	82.5	84.5
575	Mech. Input HP	.790	1.03	1.71	2.76	4.05	5.57	7.59	9.81	15.8	21.9	21.9	52.3
	Out.Torq., in.lbs.	5200	7000	12100	19900	29900	41800	58500	78000	126000	176000	176000	422000
	Therm. Input HP	.790	1.02	1. 71	2.76	3.93	5.46	6.95	8.5	14.9	21.9	21.9	52.3
	Output RPM	6.29	6.29	6.42	6.41	6.42	6.42	6.43	6.41	6.41	6.41	6.43	6.43
	Efficiency%	65.7	67.9	72.0	73.4	75.2	76.5	78.6	80.9	81.2	81.8	82.0	82.4
300	Mech. Input HP	.45	.590	.99	1.61	2.28	3.27	4.5	5.97	9.85	14.4	22.4	32.0
	Out.Torq., in.lbs.	5370	7240	12600	21800	30900	44500	61400	83000	138000	203000	326000	484000
	Therm. Input HP	.45	.590	.99	1.61	2.28	3.27	4.5	5.97	9.85	14.4	22.4	32.0
	Output RPM	3.28	3.28	3.35	3.35	3.35	3.35	3.35	3.35	3.35	3.35	3.36	3.36
	Efficiency %	62.1	63.9	67.6	71.9	72.1	72.3	72.6	73.8	74.4	74.9	77.5	80.5

INPUT SPEED (RPM)	Unit Size	35	40	50	60	70	80	90	100	120	140	170	200
	Center Distance	3.5	4	5	6	7	8	9	10	12	14	17	20
	Total Actual Ratio	104.0	103.9	103.7	103.7	103.6	103.6	103.5	101.1	103.7	99.49	99.22	99.22
	Ratio Combinations	5.07 20-1/2	5.07 20-1/2	5.06 20-1/2	5.06 20-1/2	5.05 20-1/2	5.05 20-1/2	5.05 20-1/2	4.93 20-1/2	5.06 20-1/2	5.06 19-2/3	5.05 19-2/3	5.05 19-2/3
1750	Mech. Input HP	1.60	2.12	3.78	6.12	9.20	12.8	17.4	22.8	34.0	45.6	69.8	100
	Out.Torq., in.lbs.	4570	6180	11300	18400	28000	39200	53600	71500	110000	142000	220000	320000
	Therm. Input HP	1.55	2.08	3.78	6.07	8.49	11.6	14.5	17.6	28.6	45.6	66.5	96.5
	Output RPM	16.8	16.8	16.9	16.9	16.9	16.9	16.9	17.3	16.9	17.6	17.6	17.6
	Efficiency%	76.3	77.9	80.0	80.5	81.6	82.1	82.6	86.1	86.6	86.9	88.2	89.6
1450	Mech. Input HP	1.37	1.83	3.26	5.27	7.93	11.0	15.1	20.0	30.2	40.8	65.0	92.9
	Out.Torq., in.lbs.	4690	6400	11700	19100	28800	40600	56000	75500	117000	152000	244000	358000
	Therm. Input HP	1.35	1.82	3.26	5.23	7.43	10.1	12.7	15.6	25.2	40.8	60.0	87.5
	Output RPM	13.9	14.0	14.0	14.0	14.0	14.0	14.0	14.3	14.0	14.6	14.6	14.6
	Efficiency%	75.7	77.4	79.6	80.4	80.7	82.0	82.4	85.9	86.0	86.2	87.0	89.4
1150	Mech. Input HP	1.13	1.50	2.71	4.41	6.63	9.10	12.5	16.8	25.5	35.1	58.6	80.5
	Out.Torq., in.lbs.	4800	6450	12000	19800	30000	42300	58400	79000	123000	163000	272000	382000
	Therm. Input HP	1.12	1.50	2.71	4.36	6.30	8.45	10.8	13.3	21.4	35.1	52.5	76.0
	Output RPM	11.1	11.1	11.1	11.1	11.1	11.1	11.1	11.4	11.1	11.6	11.6	11.6
	Efficiency%	74.5	75.5	77.9	79.0	79.7	81.9	82.1	84.9	85.0	85.2	85.4	87.3
865	Mech. Input HP	0.890	1.18	2.16	3.50	5.28	7.26	10.0	13.6	20.5	28.5	48.0	67.8
	Out.Torq., in.lbs.	4900	6680	12300	20300	31000	44000	61100	83800	130000	174000	294000	422000
	Therm. Input HP	0.890	1.18	2.16	3.50	5.12	6.87	8.90	11.2	18.0	28.5	45.5	67.8
	Output RPM	8.32	8.33	8.34	8.34	8.35	8.35	8.36	8.56	8.34	8.69	8.72	8.72
	Efficiency %	72.7	74.8	75.4	76.8	77.8	80.3	81.0	83.6	83.9	84.2	84.7	86.1
575	Mech. Input HP	0.620	0.810	1.51	2.45	3.73	5.22	7.10	9.71	14.9	20.9	35.1	50.9
	Out.Torq., in.lbs.	5010	6820	12600	21000	32400	45800	63600	87000	138000	188000	318000	465000
	Therm. Input HP	0.620	0.810	1.51	2.43	3.65	5.00	6.80	8.85	14.0	20.9	35.1	50.9
	Output RPM	5.53	5.53	5.54	5.54	5.55	5.55	5.56	5.69	5.54	5.78	5.80	5.80
	Efficiency%	70.9	73.9	73.4	75.4	76.5	77.3	79.0	80.9	81.5	82.5	83.3	84.0
300	Mech. Input HP	0.337	0.445	0.815	1.34	2.01	2.90	3.92	5.23	8.31	12.3	20.6	30.2
	Out.Torq., in.lbs.	5160	6860	13100	21700	33100	48000	66500	88400	141000	206000	346000	515000
	Therm. Input HP	0.330	0.430	0.790	1.30	1.99	2.80	3.86	5.23	8.20	11.5	19.2	28.2
	Output RPM	2.88	2.89	2.89	2.89	2.90	2.90	2.90	2.97	2.89	3.02	3.02	3.02
	Efficiency %	70.1	70.7	73.8	74.3	75.7	76.0	78.0	79.6	77.9	80.1	80.6	81.8

Ratings based on 1.0 service factor. For A.G.M.A. recommended practice on service factors, see page 11.

Horsepower and Torque Ratings • Helical Worm

INPUT SPEED (RPM)	Unit Size	35	40	50	60	70	80	90	100	120	140	170	200
	Center Distance	3.5	4	5	6	7	8	9	10	12	14	17	20
	Total Actual Ratio	121.9	121.8	119.4	119.4	120.6	119.3	119.2	119.5	119.4	119.4	119.1	119.1
	Ratio Combinations	4.06 30	4.06 30	4.05 29-1/2	4.05 29-1/2	4.09 29-1/2	4.04 29-1/2	4.04 29-1/2	4.05 29-1/2	4.05 29-1/2	4.05 29-1/2	4.04 29-1/2	4.04 29-1/2
1750	Mech. Input HP	1.53	2.00	3.31	5.24	7.45	10.3	14.0	18.9	27.8	35.8	54.0	77.3
	Out.Torq., in.lbs.	4740	6200	10800	17500	25600	35400	49200	66200	101000	131000	200000	288000
	Therm. Input HP	1.53	2.00	3.20	5.23	7.24	10.0	12.6	15.2	25.6	35.8	54.0	77.3
	Output RPM	14.4	14.4	14.7	14.7	14.5	14.7	14.7	14.6	14.7	14.7	14.7	14.7
	Efficiency%	70.6	70.7	75.9	77.7	79.1	80.0	81.9	81.4	84.5	85.1	86.3	86.9
1450	Mech. Input HP	1.31	1.73	2.87	4.58	6.60	9.28	12.5	16.7	25.2	32.0	50.3	69.7
	Out.Torq., in.lbs.	4880	6560	11200	18100	26900	38000	51800	70000	109000	140000	222000	310000
	Therm. Input HP	1.31	1.73	2.82	4.58	6.38	8.97	11.1	13.2	23.0	31.6	50.3	29.9
	Output RPM	11.9	11.9	12.1	12.1	12.0	12.2	12.2	12.1	12.1	12.1	12.2	12.2
	Efficiency%	70.3	71.6	75.2	76.1	77.8	79.0	80.0	80.7	83.3	84.3	85.3	85.9
1150	Mech. Input HP	1.09	1.44	2.37	3.82	5.43	7.69	10.4	13.9	21.8	28.9	46.3	64.2
	Out.Torq., in.lbs.	5020	6760	11600	18700	27600	39600	54000	73000	117000	156000	251000	355000
	Therm. Input HP	1.09	1.44	2.37	3.82	5.34	7.50	9.38	11.2	19.8	28.9	46.3	64.2
	Output RPM	9.43	9.44	9.63	9.63	9.54	9.64	9.65	9.62	9.63	9.63	9.66	9.66
	Efficiency%	68.9	70.3	74.8	74.8	76.9	78.8	79.5	80.2	82.0	82.5	83.1	84.7
865	Mech. Input HP	0.870	1.17	1.90	3.04	4.37	6.13	8.35	11.0	17.1	23.7	41.3	56.3
	Out.Torq., in.lbs.	5150	6940	12000	19600	28600	41200	56900	76500	121000	168000	294000	407000
	Therm. Input HP	0.870	1.17	1.90	3.04	4.29	6.02	7.62	9.30	16.3	22.6	41.3	56.3
	Output RPM	7.10	7.10	7.24	7.24	7.17	7.25	7.26	7.24	7.24	7.24	7.26	7.26
	Efficiency %	66.6	66.8	72.6	74.1	74.5	77.3	78.5	79.9	81.3	81.5	82.0	83.3
575	Mech. Input HP	0.620	0.810	1.34	2.15	3.05	4.45	6.00	7.83	12.7	17.7	29.9	42.8
	Out.Torq., in.lbs.	5290	7110	12400	20300	29800	43000	59600	80500	132000	186000	315000	455000
	Therm. Input HP	0.620	0.810	1.34	2.15	2.98	4.40	5.60	7.12	12.1	17.7	29.9	42.8
	Output RPM	4.72	4.72	4.82	4.82	4.77	4.82	4.82	4.81	4.82	4.82	4.83	4.83
	Efficiency%	63.9	65.7	70.7	72.1	73.9	73.9	76.0	78.5	79.4	80.3	80.7	81.4
300	Mech. Input HP	0.346	0.451	0.743	1.17	1.70	2.45	3.36	4.47	7.35	10.1	18.0	26.0
	Out.Torq., in.lbs.	5470	7410	12800	21100	31200	44500	61400	83000	137000	191000	341000	506000
	Therm. Input HP	0.340	0.440	0.740	1.20	1.70	2.45	3.38	4.47	7.35	10.1	17.2	24.9
	Output RPM	2.5	2.5	2.5	2.5	2.5	2.5	2.5	2.5	2.5	2.5	2.5	2.5
	Efficiency %	61.7	64.2	68.7	71.9	72.4	72.5	73.0	74.0	74.3	75.4	75.7	77.8

INPUT SPEED (RPM)	Unit Size	35	40	50	60	70	80	90	100	120	140	170	200
	Center Distance	3.5	4	5	6	7	8	9	10	12	14	17	20
	Total Actual Ratio	124.3	124.1	123.9	123.9	123.8	123.8	123.7	120.9	123.9	123.9	123.6	123.6
	Ratio Combinations	5.07 24-1/2	5.07 24-1/2	5.06 24-1/2	5.06 24-1/2	5.05 24-1/2	5.05 24-1/2	5.05 24-1/2	4.93 24-1/2	5.06 24-1/2	5.06 24-1/2	5.05 24-1/2	5.05 24-1/2
1750	Mech. Input HP	1.42	1.78	3.21	5.10	7.82	11.0	14.6	19.4	29.8	38.7	58.0	79.6
	Out.Torq., in.lbs.	4710	6170	11200	17900	27800	39200	53200	70000	111000	146000	222000	310000
	Therm. Input HP	1.42	1.78	3.21	5.10	7.45	10.2	12.8	15.7	25.0	38.7	58.0	79.6
	Output RPM	14.1	14.1	14.1	14.1	14.1	14.1	14.1	14.5	14.1	14.1	14.2	14.2
	Efficiency%	74.1	77.6	78.2	78.7	79.7	79.9	82.1	82.9	83.5	84.5	86.0	87.5
1450	Mech. Input HP	1.22	1.52	2.75	4.39	6.66	9.35	12.7	17.2	26.5	34.9	54.3	74.5
	Out.Torq., in.lbs.	4810	6310	11500	18400	28400	40500	55600	74000	118000	157000	250000	349000
	Therm. Input HP	1.20	1.52	2.75	4.39	6.51	8.80	11.2	13.8	22.2	34.9	53.5	74.5
	Output RPM	11.7	11.7	11.7	11.7	11.7	11.7	11.7	12.0	11.7	11.7	11.7	11.7
	Efficiency%	73.0	77.0	77.7	77.8	79.2	80.5	81.4	81.9	82.7	83.5	85.7	87.2
1150	Mech. Input HP	1.00	1.25	2.29	3.67	5.47	7.80	10.5	14.8	22.4	30.2	48.8	68.2
	Out.Torq., in.lbs.	4910	6430	11900	19200	29200	42000	57600	79500	125000	169000	276000	395000
	Therm. Input HP	1.00	1.25	2.29	3.67	5.42	7.40	9.40	11.6	18.9	30.2	46.5	68.2
	Output RPM	9.25	9.27	9.28	9.28	9.29	9.29	9.30	9.51	9.28	9.28	9.30	9.30
	Efficiency%	72.1	75.6	76.5	77.0	78.7	79.4	80.9	81.1	82.2	82.4	83.5	85.5
865	Mech. Input HP	0.790	0.990	1.82	2.92	4.35	6.30	8.50	11.5	18.0	24.5	40.4	57.2
	Out.Torq., in.lbs.	5010	6550	12200	19700	30200	44300	60000	81000	132000	181000	300000	435000
	Therm. Input HP	0.790	0.990	1.82	2.92	4.31	5.95	7.72	9.70	15.8	24.5	40.4	57.2
	Output RPM	6.96	6.97	6.98	6.98	6.99	6.99	6.99	7.15	6.98	6.98	7.00	7.00
	Efficiency %	70.0	73.2	74.3	74.7	77.0	78.0	78.3	80.0	81.2	81.8	82.5	84.4
575	Mech. Input HP	0.550	0.690	1.26	2.02	3.13	4.37	6.00	7.98	12.9	18.0	29.6	42.4
	Out.Torq., in.lbs.	5110	6670	12500	20200	31500	45400	62800	84500	140000	199000	322000	470000
	Therm. Input HP	0.550	0.690	1.26	2.02	3.08	4.27	5.80	7.51	12.3	18.0	29.6	42.4
	Output RPM	4.63	4.63	4.64	4.64	4.64	4.64	4.65	4.76	4.64	4.64	4.65	4.65
	Efficiency%	68.2	71.1	73.1	73.6	74.2	76.6	77.2	79.9	79.9	81.4	80.3	81.8
300	Mech. Input HP	0.296	0.378	0.682	1.12	1.69	2.41	3.28	4.38	7.20	10.3	17.5	25.0
	Out.Torq., in.lbs.	5240	6850	12800	21100	32400	46600	63700	86100	145000	210000	352000	513000
	Therm. Input HP	0.290	0.370	0.670	1.10	1.66	2.38	3.28	4.37	7.20	9.87	16.4	23.2
	Output RPM	2.41	2.42	2.42	2.42	2.42	2.42	2.43	2.48	2.42	2.42	2.43	2.43
	Efficiency %	67.8	69.5	72.1	72.4	73.7	74.3	74.7	77.4	77.4	78.3	77.5	79.0

Ratings based on 1.0 service factor. For A.G.M.A. recommended practice on service factors, see page 11.

Horsepower and Torque Ratings • Helical Worm

INPUT SPEED (RPM)	Unit Size	35	40	50	60	70	80	90	100	120	140	170	200
	Center Distance	3.5	4	5	6	7	8	9	10	12	14	17	20
	Total Actual Ratio	152.1	152.0	149.2	149.2	149.1	149.1	149.0	145.5	149.2	149.2	148.8	148.8
	Ratio Combinations	5.07 30	5.07 30	5.06 29-1/2	5.06 29-1/2	5.05 29-1/2	5.05 29-1/2	5.05 29-1/2	4.93 29-1/2	5.06 29-1/2	5.06 29-1/2	5.05 29-1/2	5.05 29-1/2
1750	Mech. Input HP	1.28	1.68	2.79	4.46	6.30	9.00	11.9	16.5	24.7	32.1	49.2	68.5
	Out.Torq., in.lbs.	4900	6600	11200	18200	26400	38300	52000	70500	110000	144000	222000	317000
	Therm. Input HP	1.28	1.68	2.75	4.46	6.21	8.66	10.9	13.0	22.7	32.1	49.2	68.5
	Output RPM	11.5	11.5	11.7	11.7	11.7	11.7	11.7	12.0	11.7	11.7	11.8	11.8
	Efficiency%	69.9	71.8	74.7	75.9	78.0	79.3	81.4	81.8	82.9	83.5	84.2	86.4
1450	Mech. Input HP	1.10	1.45	2.39	3.84	5.54	7.80	10.3	14.1	21.7	29.1	46.7	65.0
	Out.Torq., in.lbs.	5020	6750	11600	18800	27800	39400	53600	73000	116000	156000	251000	355000
	Therm. Input HP	1.10	1.45	2.39	3.84	5.38	7.55	9.50	11.4	20.2	29.1	46.7	65.0
	Output RPM	9.53	9.54	9.72	9.72	9.73	9.73	9.73	9.97	9.72	9.72	9.74	9.74
	Efficiency%	69.0	70.5	74.8	75.5	77.4	77.9	80.4	81.9	82.4	82.7	83.1	84.4
1150	Mech. Input HP	0.920	1.20	2.00	3.19	4.57	6.46	8.67	11.7	18.2	25.0	41.0	58.3
	Out.Torq., in.lbs.	5130	6900	11900	19400	28400	40800	55700	76000	122000	169000	278000	397000
	Therm. Input HP	0.920	1.17	2.00	3.19	4.49	6.33	8.00	9.60	17.0	25.0	40.3	58.3
	Output RPM	7.56	7.57	7.71	7.71	7.71	7.71	7.72	7.90	7.71	7.71	7.73	7.73
	Efficiency%	66.9	69.0	72.8	74.4	76.1	77.3	78.7	81.5	82.0	82.7	83.1	83.5
865	Mech. Input HP	0.720	0.950	1.60	2.55	3.67	5.08	6.90	9.40	14.6	20.2	34.4	48.7
	Out.Torq., in.lbs.	5230	7040	12400	20000	29600	42200	58000	79500	128000	178000	304000	435000
	Therm. Input HP	0.710	0.950	1.58	2.55	3.57	5.02	6.45	8.00	13.8	20.2	34.4	48.7
	Output RPM	5.69	5.69	5.80	5.80	5.80	5.80	5.81	5.95	5.80	5.80	5.81	5.81
	Efficiency %	65.5	66.9	71.3	72.1	74.2	76.5	77.4	79.8	80.6	81.1	81.5	82.4
575	Mech. Input HP	0.510	0.660	1.09	1.77	2.56	3.60	4.90	6.60	10.5	14.8	25.1	36.3
	Out.Torq., in.lbs.	5340	7190	12500	20700	30400	43800	60400	82000	134000	190000	322000	472000
	Therm. Input HP	0.510	0.660	1.09	1.77	2.50	3.57	4.78	6.18	10.2	14.8	25.1	36.3
	Output RPM	3.78	3.78	3.85	3.85	3.86	3.86	3.86	3.95	3.85	3.85	3.86	3.86
	Efficiency%	62.8	65.4	70.1	71.5	72.7	74.4	75.5	77.9	78.0	78.5	78.7	79.7
300	Mech. Input HP	0.277	0.360	0.601	0.965	1.36	1.97	2.68	3.65	5.90	8.86	14.8	21.5
	Out.Torq., in.lbs.	5500	7458	12800	21800	30900	44900	61700	83000	138000	208000	348000	519000
	Therm. Input HP	0.270	0.350	0.590	0.960	1.35	1.97	2.68	3.56	5.90	8.23	13.9	20.1
	Output RPM	1.97	1.97	2.01	2.01	2.01	2.01	2.01	2.06	2.01	2.01	2.02	2.02
	Efficiency %	62.1	64.9	67.9	72.1	72.5	72.8	73.5	74.4	74.6	74.9	75.2	77.2

INPUT SPEED (RPM)	Unit Size	35	40	50	60	70	80	90	100	120	140	170	200
	Center Distance	3.5	4	5	6	7	8	9	10	12	14	17	20
	Total Actual Ratio	162.5	162.4	161.9	161.9	163.5	161.8	161.8	162.0	161.9	158.9	159.5	159.5
	Ratio Combinations	4.06 40	4.06 40	4.05 40	4.05 40	4.09 40	4.04 40	4.04 40	4.05 40	4.05 40	4.05 39-1/2	4.04 39-1/2	4.04 39-1/2
1750	Mech. Input HP	1.19	1.53	2.63	4.00	5.95	8.40	10.7	14.0	21.5	28.6	44.0	57.7
	Out.Torq., in.lbs.	4580	6140	10800	17200	26000	36500	48000	64500	101000	133000	208000	277000
	Therm. Input HP	1.19	1.53	2.62	4.00	5.73	7.95	10.0	13.0	20.1	28.6	44.0	57.7
	Output RPM	10.8	10.8	10.8	10.8	10.7	10.8	10.8	10.8	10.8	11.0	11.0	11.0
	Efficiency%	65.8	68.6	70.4	73.7	74.2	74.6	77.0	79.0	80.8	81.3	82.3	83.6
1450	Mech. Input HP	1.04	1.32	2.29	3.49	5.20	7.40	9.27	12.4	19.6	26.2	39.9	53.7
	Out.Torq., in.lbs.	4710	6300	11100	17900	27000	38200	50000	68500	109000	144000	224000	307000
	Therm. Input HP	1.04	1.32	2.29	3.49	5.05	7.14	8.76	11.4	18.4	26.2	39.9	53.7
	Output RPM	8.92	8.93	8.96	8.96	8.87	8.96	8.96	8.95	8.96	9.13	9.09	9.09
	Efficiency%	64.1	67.6	68.9	72.9	73.1	73.4	76.7	78.5	79.0	79.6	81.0	82.5
1150	Mech. Input HP	0.860	1.10	1.90	2.96	4.28	6.13	7.80	10.8	17.1	23.4	34.5	49.5
	Out.Torq., in.lbs.	4830	6480	11500	18700	28000	39800	52000	73000	117000	158000	240000	350000
	Therm. Input HP	0.860	1.10	1.90	2.96	4.20	5.98	7.52	9.50	15.9	23.4	33.0	49.5
	Output RPM	7.08	7.08	7.10	7.10	7.03	7.11	7.11	7.10	7.10	7.24	7.21	7.21
	Efficiency%	63.1	66.2	68.2	71.2	73.0	73.2	75.2	76.1	77.1	77.5	79.6	80.9
865	Mech. Input HP	0.690	0.870	1.49	2.35	3.40	4.90	6.37	8.70	13.8	19.5	29.0	42.5
	Out.Torq., in.lbs.	4960	6640	11800	19400	29000	41600	54400	77000	125000	172000	264000	397000
	Therm. Input HP	0.690	0.870	1.49	2.35	3.35	4.83	6.12	7.75	12.9	19.5	29.0	42.5
	Output RPM	5.32	5.33	5.34	5.34	5.29	5.35	5.35	5.34	5.34	5.44	5.42	5.42
	Efficiency %	60.7	64.5	67.1	70.0	71.6	72.0	72.4	75.0	76.8	76.2	78.3	80.4
575	Mech. Input HP	0.490	0.620	1.05	1.72	2.41	3.51	4.52	6.37	10.1	14.4	21.9	33.3
	Out.Torq., in.lbs.	5090	6790	12200	20100	30400	43900	56800	81500	133000	187000	292000	447000
	Therm. Input HP	0.490	0.620	1.05	1.72	2.37	3.51	4.40	5.95	9.59	14.4	21.9	33.3
	Output RPM	3.54	3.54	3.55	3.55	3.52	3.55	3.55	3.55	3.55	3.62	3.61	3.61
	Efficiency%	58.3	61.5	65.5	65.9	70.4	70.5	70.9	72.1	74.2	74.6	76.3	76.8
300	Mech. Input HP	0.275	0.344	0.611	0.974	1.42	2.03	2.70	3.76	5.97	8.09	13.5	20.2
	Out.Torq., in.lbs.	5270	7000	12700	20800	31500	44900	62600	84800	138000	195000	326000	497000
	Therm. Input HP	0.270	0.340	0.600	0.960	1.41	2:02	2.52	3.76	5.97	8.06	13.3	19.4
	Output RPM	1.85	1.85	1.85	1.85	1.83	1.85	1.85	1.85	1.85	1.89	1.88	1.88
	Efficiency %	56.1	59.6	61.1	62.8	64.6	65.1	68.2	66.3	68.0	72.2	72.1	73.4

Ratings based on 1.0 service factor. For A.G.M.A. recommended practice on service factors, see page 11.

Horsepower and Torque Ratings • Helical Worm

INPUT SPEED (RPM)	Unit Size	35	40	50	60	70	80	90	100	120	140	170	200
	Center Distance	3.5	4	5	6	7	8	9	10	12	14	17	20
	Total Actual Ratio	182.9	182.7	182.3	182.3	182.1	182.1	182.0	182.4	182.3	182.3	181.8	181.8
	Ratio Combinations	3.05 60	3.04 60	3.04 60	3.04 60	3.03 60	3.04 60	3.03 60	3.04 60	3.04 60	3.04 60	3.04 60	3.04 60
1750	Mech. Input HP	0.990	1.15	2.02	3.12	4.70	6.60	8.45	10.9	16.5	20.2	35.5	45.2
	Out.Torq., in.lbs.	3860	4860	8810	13900	21200	30000	39600	52000	79500	101000	178000	238000
	Therm. Input HP	0.990	1.15	2.02	3.12	4.55	6.12	7.80	8.60	14.4	19.9	35.5	45.2
	Output RPM	9.57	9.58	9.60	9.60	9.61	9.61	9.62	9.59	9.60	9.60	9.63	9.63
	Efficiency%	59.2	64.2	66.4	67.9	68.8	69.3	71.5	72.6	73.4	76.2	76.6	80.4
1450	Mech. Input HP	0.870	1.00	1.77	2.74	4.20	5.90	7.72	10.0	15.5	18.7	31.8	41. 7
	Out.Torq., in.lbs.	4000	5010	9190	14600	22400	32200	42800	56000	87000	112000	192000	262000
	Therm. Input HP	0.870	1.00	1.77	2.74	4.08	5.50	6.90	7.60	12.8	18.7	31.7	41.7
	Output RPM	7.93	7.94	7.95	7.95	7.96	7.96	7.97	7.95	7.95	7.95	7.98	7.98
	Efficiency%	57.8	63.1	65.5	67.2	67.4	69.0	70.1	70.6	70.8	75.6	76.4	79.5
1150	Mech. Input HP	0.730	0.830	1.50	2.34	3.60	5.00	6.78	8.80	13.8	17.4	27.8	37.4
	Out.Torq., in.lbs.	4140	5160	9550	15400	23800	34100	46400	60500	96000	126000	206000	287000
	Therm. Input HP	0.730	0.830	1.50	2.34	3.47	4.81	5.95	6.65	10.9	17.4	27.8	37.4
	Output RPM	6.29	6.29	6.31	6.31	6.32	6.32	6.32	6.30	6.31	6.31	6.33	6.33
	Efficiency%	56.6	62. 1	63.7	65.9	66.2	68.3	68.6	68.8	69.6	72.5	74.4	77.0
865	Mech. Input HP	0.590	0.660	1.20	1.89	2.92	4.05	5.40	7.20	11.5	15.0	23.9	32.4
	Out.Torq., in.lbs.	4280	5310	9900	16100	25100	35800	48000	65000	105000	142000	226000	320000
	Therm. Input HP	0.590	0.660	1.20	1.89	2.84	3.94	4.90	5.60	8.80	15.0	23.9	32.4
	Output RPM	4.73	4.73	4.74	4.74	4.75	4.75	4.75	4.74	4.74	4.74	4.76	4.76
	Efficiency %	54.4	60.4	62.1	64.1	64.8	66.6	67.0	67.9	68.7	71.3	71.4	74.6
575	Mech. Input HP	0.420	0.470	0.860	1.34	2.08	2.94	3.96	5.25	8.50	11.8	18.8	26.2
	Out.Torq., in.lbs.	4410	5460	10300	16900	26400	37800	51400	69800	114000	161000	258000	372000
	Therm. Input HP	0.420	0.470	0.860	1.34	2.06	2.88	3.67	4.33	6.80	11.8	18.8	26.2
	Output RPM	3.14	3.15	3.15	3.15	3.16	3.16	3.16	3.15	3.15	3.15	3.16	3.16
	Efficiency%	52.4	58.0	59.9	63.1	63.6	64.4	65.1	66.5	67.1	68.3	68.9	71.3
300	Mech. Input HP	0.240	0.270	0.510	0.820	1.25	1.79	2.47	3.32	5.26	7.22	11.9	17.1
	Out.Torq., in.lbs.	4540	5600	10600	17600	27400	40000	55400	74800	122000	176000	293000	435000
	Therm. Input HP	0.240	0.270	0.510	0.820	1.25	1.79	2.47	3.32	5.26	7.22	11.9	17.1
	Output RPM	1.64	1.64	1.65	1.65	1.65	1.65	1.65	1.64	1.65	1.65	1.65	1.65
	Efficiency %	49.2	54.0	54.3	56.0	57.3	58.4	58.7	58.8	. 60.6	63.6	64.5	66.6

INPUT SPEED (RPM)	Unit Size	35	40	50	60	70	80	90	100	120	140	170	200
	Center Distance	3.5	4	5	6	7	8	9	10	12	14	17	20
	Total Actual Ratio	202.9	202.7	202.4	202.4	202.1	202.1	202.0	197.3	202.3	199.8	199.3	199.3
	Ratio Combinations	5.07 40	5.07 40	5.06 40	5.06 40	5.05 40	5.05 40	5.05 40	4.93 40	5.06 40	5.06 39-1/2	5.05 39-1/2	5.05 39-1/2
1750	Mech. Input HP	1.01	1.28	2.22	3.42	5.15	7.20	9.25	12.9	19.7	25.7	38.9	53.5
	Out.Torq., in.lbs.	4730	6330	11200	18000	27200	38400	50400	69000	110000	147000	226000	315000
	Therm. Input HP	1.01	1.28	2.22	3.42	4.88	6.94	8.66	11.2	18.0	25.7	38.9	53.5
	Output RPM	8.62	8.63	8.65	8.66	8.66	8.66	8.66	8.87	8.65	8.76	8.78	8.78
	Efficiency%	64.1	67.7	69.2	72.3	72.6	73.3	74.9	75.3	76.6	79.5	80.9	82.0
1450	Mech. Input HP	0.880	1.10	1.91	2.96	4.37	6.20	8.05	11.0	17.0	23.3	34.7	49.5
	Out.Torq., in.lbs.	4840	6460	11500	18600	28000	39800	52000	72000	115000	158000	240000	350000
	Therm. Input HP	0.880	1.10	1.91	2.96	4.19	6.02	7.60	9.60	16.0	23.3	34.7	49.5
	Output RPM	7.15	7.15	7.16	7.17	7.17	7.17	7.18	7.35	7.17	7.26	7.28	7.28
	Efficiency%	62.4	66.7	68.4	71.5	72.9	73.1	73.6	76.3	76.9	78.1	79.8	81.6
1150	Mech. Input HP	0.720	0.920	1.59	249	3.65	5.20	6.60	9.20	14.5	20.1	30.3	44.7
	Out.Torq., in.lbs.	4940	6600	11800	19200	28800	41200	53600	76000	123000	170000	260000	387000
	Therm. Input HP	0.720	0.920	1.59	2.49	3.49	5.08	6.60	8.15	13.5	20.1	30.3	44.7
	Output RPM	5.67	5.67	5.68	5.69	5.69	5.69	5.69	5.83	5.68	5.76	5.77	5.77
	Efficiency%	61.7	64.6	66.9	69.6	71.2	71.5	73.4	76.4	76.5	77.2	78.6	79.3
865	Mech. Input HP	0.570	0.720	1.24	2.01	2.92	4.16	5.30	7.45	11.8	16.4	25.0	37.4
	Out.Torq., in.lbs.	5030	6730	12000	19800	29800	42600	55600	79500	130000	180000	280000	425000
	Therm. Input HP	0.570	0.720	1.24	2.01	2.84	4.10	5.15	6.70	11.1	16.4	25.0	37.4
	Output RPM	4.26	4.27	4.27	4.28	4.28	4.28	4.28	4.38	4.28	4.33	4.34	4.34
	Efficiency %	59.7	63.3	65.6	66.9	69.3	69.5	71.3	74.2	74.7	75.4	77.1	78.3
575	Mech. Input HP	0.410	0.520	0.860	1.43	2.10	302	3.82	5.42	8.65	11.9	18.6	28.0
	Out.Torq., in.lbs.	5140	6860	12300	20500	30800	44400	57600	83000	136000	191000	304000	465000
	Therm. Input HP	0.410	0.520	0.860	1.43	1.98	3.02	3.82	5.42	8.65	11.9	18.6	28.0
	Output RPM	2.83	2.84	2.84	2.85	2.85	2.85	2.85	2.91	2.84	2.88	2.89	2.89
	Efficiency%	56.4	59.4	64.5	64.7	66.2	66.4	68.1	70.8	70.9	73.3	74.8	76.0
300	Mech. Input HP	0.226	0.275	0.496	0.788	1.16	1.63	2.24	3.00	4.81	6.77	11.5	17.1
	Out.Torq., in.lbs.	5300	7040	12800	21000	31800	45400	63400	84400	140000	198000	332000	509000
	Therm. Input HP	0.220	0.270	0.480	0.770	1.14	1.61	2.00	3.00	4.76	6.60	10.8	16.0
	Output RPM	1.48	1.48	1.48	1.48	1.48	1.48	1.49	1.52	1.48	1.50	1.51	1.51
	Efficiency %	55.0	60.1	60.7	62.7	64.6	65.6	66.7	67.9	68.5	69.7	69.0	71.1

Ratings based on 1.0 service factor. For A.G.M.A. recommended practice on service factors, see page 11.

Horsepower and Torque Ratings • Helical Worm

INPUT SPEED (RPM)	Unit Size	35	40	50	60	70	80	90	100	120	140	170	200
	Center Distance	3.5	4	5	6	7	8	9	10	12	14	17	20
	Total Actual Ratio	213.3	213.2	212.1	212.7	212.4	212.5	212.3	212.8	212.7	212.7	212.1	212.1
	Ratio Combinations	3.05 70	3.04 70	3.04 70	3.04 70	3.03 70	3.04 70	3.03 70	3.04 70	3.04 70	3.04 70	3.04 70	3.04 70
1750	Mech. Input HP	0.830	1.04	1.76	2.76	4.15	5.50	7.47	9.10	13.5	16.7	27.7	36.8
	Out.Torq., in.lbs.	3560	4760	8310	13400	20400	28000	37200	48000	73000	94000	156000	222000
	Therm. Input HP	0.830	1.04	1.76	2.76	3.98	5.20	6.40	6.80	11.6	16.7	27.7	36.8
	Output RPM	8.20	8.21	8.25	8.23	8.24	8.24	8.24	8.22	8.23	8.23	8.25	8.25
	Efficiency%	55.8	59.6	61.8	63.4	64.3	66.5	65.1	68.8	70.6	73.5	73.7	79.0
1450	Mech. Input HP	0.740	0.920	1.56	2.46	3.69	4.96	6.87	8.80	12.9	15.9	23.9	34.6
	Out.Torq., in.lbs.	3690	4930	8700	14100	21200	30200	40200	55000	81000	105000	162000	238000
	Therm. Input HP	0.740	0.920	1.56	2.46	3.59	4.70	5.70	5.90	10.3	15.9	23.9	34.6
	Output RPM	6.80	6.80	6.84	6.82	6.83	6.82	6.83	6.81	6.82	6.82	6.84	6.84
	Efficiency%	53.8	57.8	60.5	62.0	62.2	65.9	63.4	67.6	67.9	71.4	73.5	74.6
1150	Mech. Input HP	0.620	0.780	1.34	2.13	3.20	4.36	6.07	7.87	11.7	14.2	21.6	31.2
	Out.Torq., in.lbs.	3810	5100	9100	14900	23000	32200	43200	59000	89000	115000	179000	262000
	Therm. Input HP	0.620	0.780	1.34	2.13	3.10	4.18	4.91	5.15	8.80	14.2	21.6	31.2
	Output RPM	5.39	5.39	5.42	5.41	5.41	5.41	5.42	5.40	5.41	5.41	5.42	5.42
	Efficiency%	52.6	56.0	58.4	60.0	61.7	63.4	61.2	64.3	65.3	69.5	71.3	72.2
865	Mech. Input HP	0.500	0.610	1.08	1.72	2.60	3.70	5.00	6.53	9.93	13.0	20.0	27.8
	Out.Torq., in.lbs.	3930	5260	9490	15700	23800	34000	46400	62000	97000	134000	212000	300000
	Therm. Input HP	0.500	0.610	1.08	1.72	2.57	3.46	4.08	4.40	7.45	13.0	20.0	27.8
	Output RPM	4.06	4.06	4.08	4.07	4.07	4.07	4.07	4.06	4.07	4.07	4.08	4.08
	Efficiency %	50.6	55.5	56.9	58.9	59.1	59.4	60.0	61.2	63.0	66.5	68.6	69.8
575	Mech. Input HP	0.360	0.440	0.780	1.24	1.88	2.67	3.62	4.80	7.47	10.5	16.4	23.4
	Out.Torq., in.lbs.	4050	5420	9900	16400	25200	36000	49600	66000	106000	154000	253000	357000
	Therm. Input HP	0.360	0.440	0.780	1.24	1.86	2.52	3.12	3.60	5.95	10.5	16.4	23.4
	Output RPM	2.70	2.70	2.71	2.70	2.71	2.71	2.71	2.70	2.70	2.70	2.71	2.71
	Efficiency%	48.1	52.7	54.6	56.7	57.6	57.9	58.9	59.0	60.9	62.9	66.4	65.6
300	Mech. Input HP	0.210	0.260	0.470	0.760	1.14	1.63	2.26	2.97	4.70	6.42	10.5	15.2
	Out.Torq., in.lbs.	4170	5600	10300	17200	26900	38600	53500	71800	115000	170000	284000	421000
	Therm. Input HP	0.210	0.260	0.470	0.760	1.14	1.63	2.26	2.97	4.70	6.42	10.5	15.2
	Output RPM	1.41	1.41	1.41	1.41	1.41	1.41	1.41	1.41	1.41	1.41	1.41	1.41
	Efficiency %	44.3	48.1	49.2	50.6	52.9	53.0	53.1	54.1	54.8	59.3	60.7	62.2

INPUT SPEED (RPM)	Unit Size	35	40	50	60	70	80	90	100	120	140	170	200
	Center Distance	3.5	4	5	6	7	8	9	10	12	14	17	20
	Total Actual Ratio	243.7	243.5	242.9	242.9	245.2	242.7	242.4	243.0	242.9	242.9	242.2	242.2
	Ratio Combinations	4.06 60	4.06 60	4.05 60	4.05 60	4.09 60	4.04 60	4.04 60	4.05 60	4.05 60	4.05 60	4.04 60	4.04 60
1750	Mech. Input HP	0.810	0.930	1.65	2.58	3.95	5.58	7.38	9.70	15.0	18.1	30.2	39.5
	Out.Torq., in.lbs.	4070	5080	9350	14800	23000	33200	44400	58500	91000	118000	198000	267000
	Therm. Input HP	0.810	0.930	1.65	2.56	3.83	5.30	6.50	7.20	12.0	18.1	30.2	39.5
	Output RPM	7.18	7.19	7.20	7.20	7.14	7.21	7.22	7.20	7.20	7.20	7.23	7.23
	Efficiency%	57.3	62.3	64.8	65.6	65.9	68.1	68.9	68.9	69.4	74.5	75.2	77.5
1450	Mech. Input HP	0.700	0.800	1.44	2.25	3.45	4.92	6.52	8.65	13.5	16.8	26.9	35.1
	Out.Torq., in.lbs.	4170	5190	9630	15500	24000	34600	46400	62000	98000	129000	210000	293000
	Therm. Input HP	0.700	0.800	1.44	2.23	3.41	4.70	5.70	6.40	10.4	16.8	25.0	35.1
	Output RPM	5.95	5.95	5.97	5.97	5.91	5.97	5.98	5.97	5.97	5.97	5.99	5.99
	Efficiency%	56.2	61.3	63.3	65.2	65.3	66.7	67.5	67.9	68.8	72.7	74.2	79.3
1150	Mech. Input HP	0.590	0.660	1.20	1.87	2.88	4.10	5.43	7.20	11.5	15.4	23.6	32.5
	Out.Torq., in.lbs.	4280	5310	9900	16100	25200	35800	48400	65000	105000	143000	226000	320000
	Therm. Input HP	0.590	0.660	1.20	1.87	2.83	3.91	4.86	5.60	8.80	15.4	21.0	32.5
	Output RPM	4.72	4.72	4.73	4.73	4.69	4.74	4.74	4.73	4.73	4.73	4.75	4.75
	Efficiency%	54.3	60.3	62.0	64.7	65.1	65.6	67.1	67.8	68.6	69.8	72.1	74.2
865	Mech. Input HP	0.470	0.520	0.960	1.51	2.34	3.26	4.35	5.81	9.25	12.8	20.1	28.0
	Out.Torq., in.lbs.	4380	5420	10200	16700	26200	37400	50500	68500	112000	156000	248000	360000
	Therm. Input HP	0.470	0.520	0.960	1.51	2.26	3.17	4.00	4.70	7.30	12.8	15.6	28.0
	Output RPM	3.55	3.55	3.56	3.56	3.53	3.56	3.57	3.56	3.56	3.56	3.57	3.57
	Efficiency %	52.5	58.7	60.0	62.5	62.7	64.9	65.7	66.6	68.4	68.9	69.9	72.9
575	Mech. Input HP	0.330	0.370	0.680	1.08	1.65	2.36	3.17	4.20	6.70	9.53	15.4	21.6
	Out.Torq., in.lbs.	4480	5530	10400	17300	27000	39000	53600	72000	118000	169000	274000	405000
	Therm. Input HP	0.330	0.370	0.680	1.08	1.63	2.32	3.00	3.65	5.78	9.53	13.0	21.6
	Output RPM	2.36	2.36	2.37	2.37	2.35	2.37	2.37	2.37	2.37	2.37	2.37	2.37
	Efficiency%	50.8	56.0	57.4	60.2	60.9	62.1	63.6	64.4	66.2	66.6	67.0	70.6
300	Mech. Input HP	0.185	0.219	0.388	0.636	0.943	1.34	1.85	2.48	3.97	5.86	9.72	14.0
	Out.Torq., in.lbs.	4660	5850	10900	18000	27600	39900	55200	74300	122000	184000	308000	458000
	Therm. Input HP	0.180	0.210	0.380	0.620	0.937	1.34	1.85	2.48	3.97	5.60	9.25	13.3
	Output RPM	1.23	1.23	1.24	1.24	1.22	1.24	1.24	1.23	1.24	1.24	1.24	1.24
	Efficiency %	49.2	52.2	55.1	55.5	56.8	58.4	58.6	58.7	60.2	61.5	62.3	64.3

Ratings based on 1.0 service factor. For A.G.M.A. recommended practice on service factors, see page 11.

Horsepower and Torque Ratings • Helical Worm

INPUT SPEED (RPM)	Unit Size	35	40	50	60	70	80	90	100	120	140	170	200
	Center Distance	3.5	4	5	6	7	8	9	10	12	14	17	20
	Total Actual Ratio	253.6	253.3	252.9	252.9	252.6	252.6	252.5	246.7	252.9	252.9	252.3	252.3
	Ratio Combinations	5.07 50	5.07 50	5.06 50	5.06 50	5.05 50	5.05 50	5.05 50	4.93 50	5.06 50	5.06 50	5.05 50	5.05 50
1750	Mech. Input HP	0.820	1.00	1.78	2.74	4.17	5.87	7.57	10.4	15.3	19.9	31.4	42.7
	Out.Torq., in.lbs.	4450	5840	10500	17000	26200	37200	49400	67000	105000	138000	220000	307000
	Therm. Input HP	0.820	1.00	1.78	2.74	4.07	5.61	7.30	8.40	14.0	19.9	31.4	42.7
	Output RPM	6.90	6.91	6.92	6.92	6.93	6.93	6.93	7.09	6.92	6.92	6.94	6.94
	Efficiency%	59.4	64.0	64.8	68.1	69.1	69.7	71.8	72.5	75.3	76.1	77.1	79.1
1450	Mech. Input HP	0.700	0.860	1.53	2.37	3.55	5.05	6.54	9.13	13.8	18.3	28.6	39.6
	Out.Torq., in.lbs.	4540	5950	10800	17500	26900	38300	50500	70200	112000	150000	236000	337000
	Therm. Input HP	0.700	0.860	1.53	2.37	3.51	4.90	6.40	7.40	12.4	18.3	28.6	39.6
	Output RPM	5.72	5.72	5.73	5.73	5.74	5.74	5.74	5.88	5.73	5.73	5.75	5.75
	Efficiency%	58.8	62.8	64.2	67.2	69.0	69.1	70.4	71.7	73.8	74.6	75.2	77.6
1150	Mech. Input HP	0.580	0.710	1.28	2.00	2.98	4.22	5.59	7.50	11.9	16.0	25.3	34.3
	Out.Torq., in.lbs.	4630	6060	11100	18000	27800	39800	53600	73500	120000	163000	258000	372000
	Therm. Input HP	0.580	0.710	1.28	2.00	2.94	4.12	5.43	6.20	10.5	16.0	22.0	34.3
	Output RPM	4.53	4.54	4.55	4.55	4.55	4.55	4.55	4.66	4.55	4.55	4.56	4.56
	Efficiency%	57.4	61.5	62.6	64.9	67.4	68.1	69.3	72.5	72.8	73.5	73.8	78.4
865	Mech. Input HP	0.470	0.550	1.02	1.61	2.40	3.40	4.55	5.90	9.40	13.2	20.5	30.4
	Out.Torq., in.lbs.	4710	6160	11400	18500	28700	41100	55600	76700	126000	178000	278000	415000
	Therm. Input HP	0.470	0.550	1.02	1.61	2.30	3.34	4.40	5.15	8.70	13.2	18.0	30.4
	Output RPM	3.41	3.41	3.42	3.42	3.42	3.42	3.43	3.51	3.42	3.42	3.43	3.43
	Efficiency %	54.2	60.7	60.7	62.4	65.0	65.7	66.4	72.3	72.7	73.2	73.8	74.3
575	Mech. Input HP	0.330	0.390	0.720	1.14	1.70	2.43	3.30	4.50	7.10	9.53	15.8	22.3
	Out.Torq., in.lbs.	4900	6270	11600	19000	29300	42800	59600	80000	131000	184000	305000	445000
	Therm. Input HP	0.330	0.390	0.720	1.14	1.64	2.43	3.25	4.00	6.69	9.53	15.8	22.3
	Output RPM	2.27	2.27	2.27	2.27	2.28	2.28	2.28	2.33	2.27	2.27	2.28	2.28
	Efficiency%	53.4	57.9	58.1	60.1	62.3	63.6	65.3	65.7	66.6	69.7	69.8	72.2
300	Mech. Input HP	0.176	0.212	0.395	0.649	0.970	1.38	1.86	2.47	3.99	5.90	9.76	14.0
	Out.Torq., in.lbs.	4980	6350	12200	20200	30800	44300	61300	80900	135000	200000	335000	513000
	Therm. Input HP	0.170	0.210	0.380	0.620	0.945	1.34	1.84	2.47	3.97	5.50	9.04	12.4
	Output RPM	1.18	1.18	1.19	1.19	1.19	1.19	1.19	1.22	1.19	1.19	1.19	1.19
	Efficiency %	53.1	56.3	58.1	58.6	59.8	60.5	62.1	63.2	63.7	63.8	64.8	69.1

INPUT SPEED (RPM)	Unit Size	35	40	50	60	70	80	90	100	120	140	170	200
	Center Distance	3.5	4	5	6	7	8	9	10	12	14	17	20
	Total Actual Ratio	284.4	284.1	283.3	283.3	286.1	283.2	282.8	283.5	283.3	283.3	282.6	282.6
	Ratio Combinations	4.06 70	4.06 70	4.05 70	4.05 70	4.09 70	4.04 70	4.04 70	4.05 70	4.05 70	4.05 70	4.04 70	4.04 70
1750	Mech. Input HP	0.680	0.860	1.47	2.32	3.52	4.74	6.30	8.50	12.4	15.6	22.7	33.0
	Out.Torq., in.lbs.	3740	5010	8880	14500	22400	31300	41600	58000	85000	112000	168000	247000
	Therm. Input HP	0.680	0.860	1.47	2.32	3.37	4.48	5.15	5.40	9.60	15.6	22.7	33.0
	Output RPM	6.15	6.16	6.18	6.18	6.12	6.18	6.19	6.17	6.18	6.18	6.19	6.19
	Efficiency%	53.7	56.9	59.2	61.3	61.8	64.7	64.8	66.8	67.2	70.4	72.7	73.5
1450	Mech. Input HP	0.600	0.740	1.28	2.04	3.10	4.26	5.70	7.80	11.2	14.3	20.3	30.2
	Out.Torq., in.lbs.	3840	5130	9190	15100	23200	32700	44000	60700	91000	122000	178000	267000
	Therm. Input HP	0.600	0.740	1.28	2.04	3.00	4.08	4.70	5.00	8.40	14.3	20.3	30.2
	Output RPM	5.10	5.10	5.12	5.12	5.07	5.12	5.13	5.11	5.12	5.12	5.13	5.13
	Efficiency%	51.8	56.1	58.3	60.1	60.2	62.4	62.8	63.2	66.0	69.3	71.4	72.0
1150	Mech. Input HP	0.500	0.610	1.07	1.72	2.60	3.65	4.90	6.40	9.90	13.2	19.9	28.2
	Out.Torq., in.lbs.	3930	5260	9490	15700	24000	34000	46600	62000	98000	135000	212000	302000
	Therm. Input HP	0.500	0.610	1.07	1.72	2.55	3.46	4.04	4.40	7.42	13.2	19.9	28.2
	Output RPM	4.04	4.05	4.06	4.06	4.02	4.06	4.07	4.06	4.06	4.06	4.07	4.07
	Efficiency%	50.4	55.4	57.1	58.8	58.9	60.0	61.4	62.4	63.8	65.9	68.8	69.1
865	Mech. Input HP	0.400	0.490	0.860	1.37	2.07	2.97	4.03	5.30	8.10	11.3	17.8	24.8
	Out.Torq., in.lbs.	4020	5380	9780	16200	24900	35600	48800	65300	104000	149000	244000	345000
	Therm. Input HP	0.400	0.490	0.860	1.37	2.05	2:76	3.40	3.65	6.33	11.3	17.8	24.8
	Output RPM	3.04	3.04	3.05	3.05	3.02	3.05	3.06	3.05	3.05	3.05	3.06	3.06
	Efficiency %	48.5	53.0	55.1	57.3	57.7	58.1	58.8	59.6	62.2	63.9	66.6	67.6
575	Mech. Input HP	0.280	0.340	0.630	1.01	1.46	2.08	2.86	3.70	5.90	8.60	13.7	19.8
	Out.Torq., in.lbs.	4110	5500	10300	16800	26000	37300	51900	69000	111000	163000	270000	390000
	Therm. Input HP	0.280	0.340	0.630	1.01	1.44	2.04	2.60	3.15	5.17	8.60	13.7	19.8
	Output RPM	2.02	2.02	2.03	2.03	2.01	2.03	2.03	2.03	2.03	2.03	2.03	2.03
	Efficiency%	47.1	51.9	52.7	53.6	56.8	57.8	58.5	60.0	60.6	61.0	63.6	63.6
300	Mech. Input HP	0.203	0.195	0.360	0.580	0.867	1.22	1.70	2.23	3.43	5.10	8.14	11.1
	Out.Torq., in.lbs.	5280	5750	10600	17200	26900	38400	53500	71800	116000	170000	284000	421000
	Therm. Input HP	0.160	0.190	0.360	0.580	0.867	1.22	1.70	2.23	3.43	5.10	8.14	11.1
	Output RPM	1.05	1.06	1.06	1.06	1.05	1.06	1.06	1.06	1.06	1.06	1.06	1.06
	Efficiency %	43.5	49.4	49.5	49.8	51.6	52.9	53.0	54.1	56.8	56.0	58.8	63.9

Ratings based on 1.0 service factor. For A.G.M.A. recommended practice on service factors, see page 11.

Horsepower and Torque Ratings • Helical Worm

INPUT SPEED (RPM)	Unit Size	35	40	50	60	70	80	90	100	120	140	170	200
	Center Distance	3.5	4	5	6	7	8	9	10	12	14	17	20
	Total Actual Ratio	304.3	304.0	303.5	303.5	303.2	303.2	303.0	296.0	303.5	303.5	302.7	302.7
	Ratio Combinations	5.07	5.07	5.06	5.06	5.05	5.05	5.05	4.93	5.06	5.06	5.05	5.05
		60	60	60	60	60	60	60	60	60	60	60	60
1750	Mech. Input HP	0.680	0.770	1.40	2.17	3.35	4.78	6.35	8.65	13.2	16.6	26.5	35.5
	Out.Torq., in.lbs.	4190	5210	9670	15600	24200	34700	46600	62300	99000	132000	212000	297000
	Therm. Input HP	0.680	0.720	1.40	2.17	3.28	4.58	5.60	6.40	10.3	16.6	25.0	35.5
	Output RPM	5.75	5.76	5.77	5.77	5.77	5.77	5.78	5.91	5.77	5.77	5.78	5.78
	Efficiency%	56.2	61.8	63.2	65.8	66.2	66.5	67.3	67.6	68.6	72.7	73.4	76.7
1450	Mech. Input HP	0.590	0.670	1.20	1.89	2.95	4.10	5.46	7.50	11.7	15.4	23.6	32.6
	Out.Torq., in.lbs.	4270	5300	9890	16100	25200	35800	48000	65000	105000	143000	224000	320000
	Therm. Input HP	0.590	0.670	1.20	1.89	2.95	3.98	4.90	5.60	8.80	15.4	22.6	32.6
	Output RPM	4.77	4.77	4.78	4.78	4.78	4.78	4.79	4.90	4.78	4.78	4.79	4.79
	Efficiency%	54.7	59.9	62.5	64.6	64.8	66.3	66.8	67.4	68.3	70.4	72.1	74.6
1150	Mech. Input HP	0.490	0.550	1.00	1.56	2.40	3.38	4.50	6.20	9.80	13.4	21.0	29.0
	Out.Torq., in.lbs.	4360	5390	10100	16600	26000	37000	50000	67500	110000	154000	244000	350000
	Therm. Input HP	0.490	0.550	1.00	1.56	2.39	3.31	4.19	4.80	7.58	13.4	18.3	29.0
	Output RPM	3.78	3.78	3.79	3.79	3.79	3.79	3.80	3.89	3.79	3.79	3.80	3.80
	Efficiency%	53.4	58.8	60.7	64.0	65.2	65.9	66.9	67.1	67.5	69.1	70.0	72.8
865	Mech. Input HP	0.390	0.430	0.800	1.25	1.94	2.74	3.68	4.95	7.80	11.0	17.4	24.4
	Out.Torq., in.lbs.	4440	5480	10300	17000	26600	38200	52400	71200	116000	164000	263000	385000
	Therm. Input HP	0.390	0.430	0.800	1.25	1.89	2.69	3.42	4.04	6.40	11.0	15.7	24.4
	Output RPM	2.84	2.85	2.85	2.85	2.85	2.85	2.85	2.92	2.85	2.85	2.86	2.86
	Efficiency %	51.3	57.5	58.2	61.5	62.1	63.1	64.5	66.7	67.3	67.4	68.5	71.5
575	Mech. Input HP	0.270	0.300	0.570	0.920	1.39	1.99	2.70	3.50	5.60	8.10	13.1	18.7
	Out.Torq., in.lbs.	4520	5570	10700	17500	27200	39800	54100	73000	120000	174000	286000	425000
	Therm. Input HP	0.270	0.300	0.570	0.920	1.36	1.90	2.70	3.21	5.17	8.10	12.0	18.7
	Output RPM	1.89	1.89	1.89	1.89	1.90	1.90	1.90	1.94	1.89	1.89	1.90	1.90
	Efficiency%	50.2	55.7	56.4	57.2	58.9	60.2	60.3	64.3	64.4	64.6	65.8	68.5
300	Mech. Input HP	0.155	0.178	0.311	0.508	0.774	1.09	1.50	1.99	3.17	4.81	8.04	11.6
	Out.Torq., in.lbs.	4690	5880	11000	18200	27900	40300	55800	74500	123000	188000	314000	469000
	Therm. Input HP	0.150	0.170	0.300	0.500	0.774	1.08	1.47	1.98	3.15	4.57	7.62	10.8
	Output RPM	0.986	0.987	0.988	0.988	0.989	0.989	0.990	1.01	0.988	0.988	0.991	0.991
	Efficiency %	47.3	51.7	55.5	56.2	56.6	58.0	58.4	60.2	60.9	61.3	61.4	63.6

INPUT SPEED (RPM)	Unit Size	35	40	50	60	70	80	90	100	120	140	170	200
	Center Distance	3.5	4	5	6	7	8	9	10	12	14	17	20
	Total Actual Ratio	355.0	354.7	354.1	354.1	353.7	353.7	353.7	345.3	354.1	354.1	353.2	353.2
	Ratio Combinations	5.07	5.07	5.06	5.06	5.05	5.05	5.05	4.93	5.06	5.06	5.05	5.05
		70	70	70	70	70	70	70	70	70	70	70	70
1750	Mech. Input HP	0.580	0.720	1.25	1.99	3.00	4.12	5.50	7.42	11.0	14	20.8	30.2
	Out.Torq., in.lbs.	3850	5160	9230	15200	23300	32800	44400	61000	92000	124000	188000	275000
	Therm. Input HP	0.580	0.720	1.25	1.99	2.92	3.98	4.60	4.80	8.40	14.2	20.8	30.2
	Output RPM	4.93	4.93	4.94	4.94	4.95	4.95	4.95	5.07	4.94	4.94	4.95	4.95
	Efficiency%	51.9	56.1	57.9	59.9	61.0	62.5	63.4	66.1	65.6	68.5	71.1	71.6
1450	Mech. Input HP	0.500	0.620	1.08	1.72	2.59	3.57	4.85	6.56	9.90	13	19.9	28.6
	Out.Torq., in.lbs.	3930	5260	9480	15700	23800	34000	46400	62000	97000	134000	212000	310000
	Therm. Input HP	0.500	0.620	1.08	1.72	2.57	3.47	4.01	4.40	7.50	13.1	18.7	28.6
	Output RPM	4.08	4.09	4.09	4.09	4.10	4.10	4.10	4.20	4.09	4.09	4.11	4.11
	Efficiency%	50.9	55.0	57.0	59.3	59.8	61.9	62.2	63.0	63.7	66.5	69.4	70.6
1150	Mech. Input HP	0.410	0.510	0.890	1.44	2.16	2.96	4.05	5.50	8.34	11.7	18.2	24.7
	Out.Torq., in.lbs.	4000	5360	9730	16100	24700	35200	48400	64000	102000	147000	236000	335000
	Therm. Input HP	0.410	0.510	0.850	1.44	2.15	2.90	4.01	4.00	6.53	11.7	16.5	24.7
	Output RPM	3.24	3.24	3.25	3.25	3.25	3.25	3.25	3.33	3.25	3.25	3.26	3.26
	Efficiency%	50.1	54.1	56.3	57.6	59.0	61.3	61.7	61.5	63.0	64.7	67.0	70.1
865	Mech. Input HP	0.330	0.410	0.720	1.16	1.73	2.42	3.20	4.30	6.70	9.80	15.3	22.2
	Out.Torq., in.lbs.	4070	5460	9960	16600	25600	36500	50400	67100	108000	159000	260000	379000
	Therm. Input HP	0.330	0.410	0.720	1.16	1.71	2.34	2.96	3.45	5.60	9.80	12.0	222
	Output RPM	2.44	2.44	2.44	2.44	2.45	2.45	2.45	2.51	2.44	2.44	2.45	2.45
	Efficiency %	47.7	51.5	53.6	55.5	57.4	58.5	61.1	62.0	62.5	62.9	66.0	66.3
575	Mech. Input HP	0.230	0.290	0.520	0.840	1.23	1.71	2.35	3.19	5.00	7.30	11.7	16.9
	Out.Torq., in.lbs.	4150	5550	10300	17100	26600	38000	52800	70500	114000	168000	280000	410000
	Therm. Input HP	0.230	0.290	0.520	0.840	1.21	1.68	2.30	2.80	4.68	7.30	11.7	16.9
	Output RPM	1.62	1.62	1.62	1.62	1.63	1.63	1.63	1.67	1.62	1.62	1.63	1.63
	Efficiency%	46.4	49.2	51.0	52.5	55.8	57.3	58.0	58.4	58.7	59.3	61.8	62.7
300	Mech. Input HP	0.166	0.165	0.280	0.460	0.693	0.977	1.36	1.78	2.82	4.18	6.70	9.80
	Out.Torq., in.lbs.	5330	5780	10300	17200	26900	38400	53700	71800	118000	176000	284000	421000
	Therm. Input HP	0.130	0.160	0.280	0.460	0.693	0.977	1.36	1.78	2.82	4.18	6.70	9.80
	Output RPM	0.845	0.846	0.847	0.847	0.848	0.848	0.848	0.869	0.847	0.847	0.849	0.849
	Efficiency %	43.1	47.0	49.4	50.3	52.2	52.9	53.1	55.6	56.2	56.6	57.1	57.9

Ratings based on 1.0 service factor. For A.G.M.A. recommended practice on service factors, see page 11.

Dimensions Type HE • Horizontal and Vertical

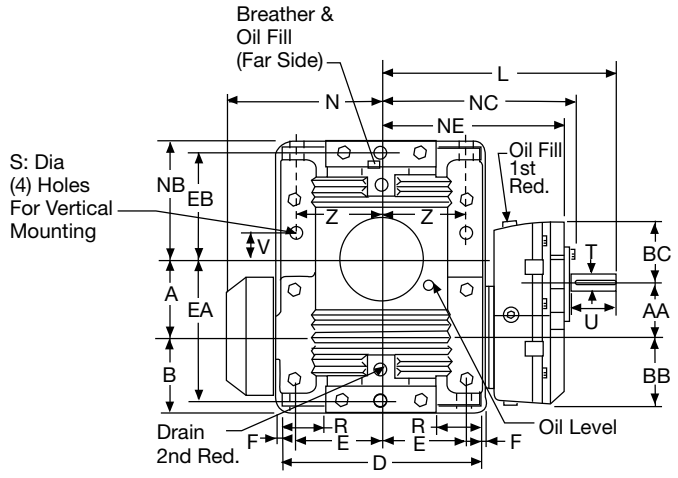

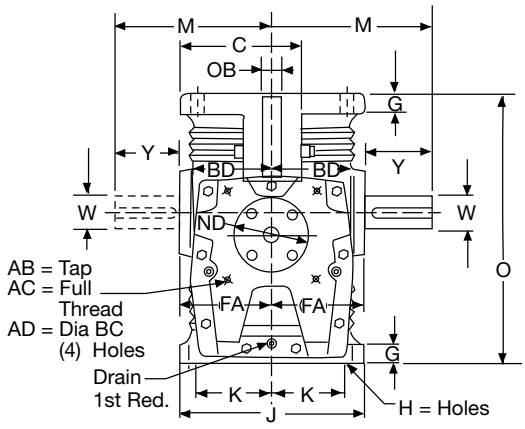

Horizontal Assemblies

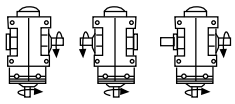

Helical Input Shaft Positions

Vertical Assemblies

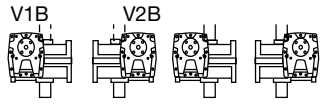

Helical Input Shaft Positions

UNIT SIZE	WT. LBS.	A	AA	AB	AC	AD	B	BB	BC	BD	C	D	E	EA	EB	F	FA	G	H	J	K	L	M	N	NB	NC	ND	NE	O	OB	R	S	V	T▲	U	KEYWAY	W▲	Y	KEYWAY	Z
HE35	120	3 1/2	2 1/2	3/8-16	5/8	5 3/4	3 3/8	3 1/8	2 3/4	3 5/8	5 5/16	9	3 7/8	6 3/8	4 7/8	1/4	4 1/8	7/8	1 1/16	8 1/4	3 3/8	10 5/8	7 1/8	7 1/16	5 3/8	8 5/8	3 5/16	8 1/8	12 1/4	7/8	2	9/16	1 1/4	3/4	2	3/16 x 3/32 x 1 15/16	1 1/2	3	3/8 x 3/16 x 2 15/16	3 1/8
HE40	189	4	3	3/8-16	5/8	5 3/4	4 1/4	3 1/2	2 7/8	4	6 5/16	10 1/4	4 1/4	7 1/2	5 1/4	3/8	5	7/8	13/16	10	4	11 9/16	8 1/2	8 1/16	6	9 9/16	3 5/16	9 1/8	14 1/14	1	2 3/8	11/16	1 3/4	7/8	2	3/16 x 3/32 x 1 15/16	1 3/4	3 1/2	3/8 x 3/16 x 3 1/16	4 1/4

Dimensions Type HEB • Horizontal

Assemblies

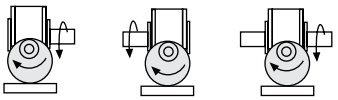

Helical Input Shaft Positions

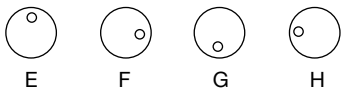

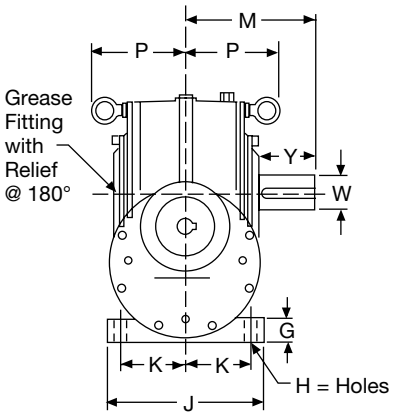

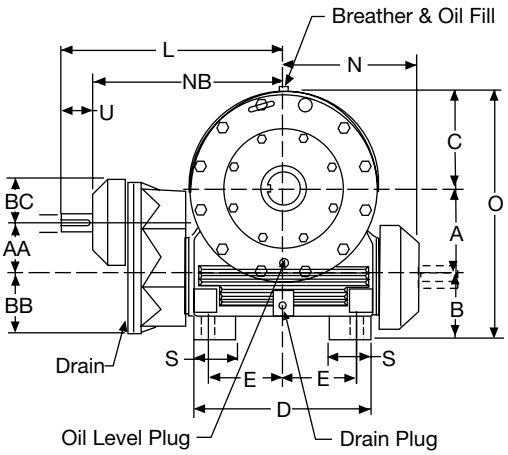

Unit Size	WT. LBS.	A	AA	B	BB	BC	C	D	E	G	H	J	K	L	M	N	NB	O	P	S	T▲	U +.000 −.001	Keyway	W▲ +.000 −.001	Y	Keyway
*HEB170	4400	17	10	10 1/2	11 1/2	8	18 1/2	32	13 1/4	3 3/8	1 11/16	24	10 1/4	41 3/8	21 1/2	22 3/4	36 3/8	45 3/4	13 1/4	5 3/4	2 1/2	5	5/8 x 5/16 x 4 15/16	5 3/4	10	1 1/2 x 3/4 x 9 3/4
*HEB200	6000	20	10	11 1/2	11 1/2	8	21 7/16	36	14 3/4	3 5/8	1 15/16	27	11 1/2	43 1/4	23 3/4	26	38 1/4	52 3/4	14 1/2	6 1/2	2 1/2	5	5/8 x 5/16 x 4 15/16	6 1/2	11	1 1/2 x 3/4 x 10 1/2

*No "suger scoop" motor mount available for 170 or 200 sizes.

All dimensions are in inches. Use certified prints for construction. The input shaft may be rotated in either direction. Standard gear sets are cut with right hand threads giving relative shaft rotations as shown above. Shaft arrangements are shown above. Desired assembly should be specified when ordering. Standard keys are furnished with units.

▲ Tolerances: 1 1/2" Diameter or Less = +.0000" -.0005"
Over 1 1/2" Diameter = +.000" -.001"

Low input speeds require special order instructions. See introductory section.

Dimensions Type HE • Horizontal

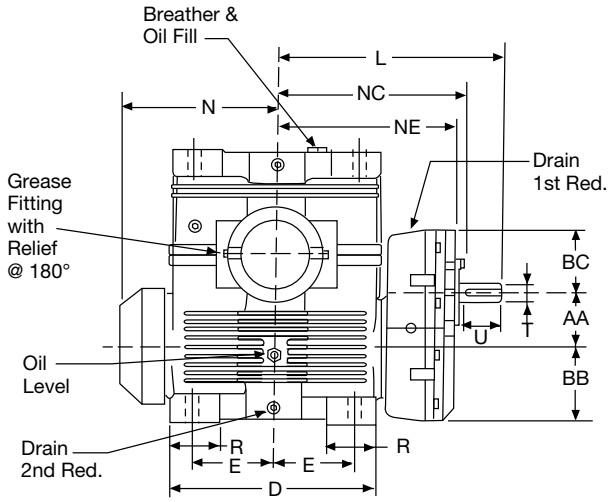

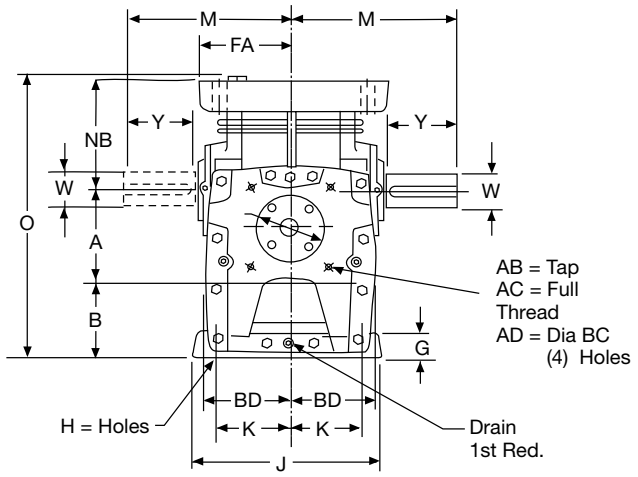

Assemblies

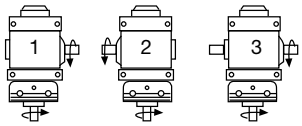

Helical Input Shaft Positions

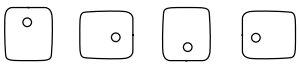

Special note: Unit size 140 will be supplied with a fan mounted on input shaft. Allowance has been made in "L" & "NC" dimensions.

Unit Size	WT. LBS.	A	AA	AB	AC	AD	B	BB	BC	BD	D	E	FA	G	H	J	K	L	M	N	NB	NC	ND	NE	O	R	T▲	U	Keyway	W▲	Y	Keyway
HE50	221	5	3 1/2	1/2-13	3/4	7 1/4	4 5/8	4	3 1/2	4 5/8	11 3/8	4 3/4	5 1/2	1 1/2	13/16	10 3/4	4 3/8	12 5/8	9 5/8	8 9/16	5 3/4	10 3/8	4 1/4	9 7/8	15 7/8	2	1 1/8	2 1/4	1/4 x 1/8 x 2 3/16	2	4	1/2 x 1/4 x 3 7/8
HE60	333	6	4	1/2-13	3/4	7 1/4	5	4 3/4	3 5/8	5 1/2	13 1/2	5 1/4	6 1/8	1 11/16	15/16	12 1/4	4 3/4	14 3/4	10 3/4	10 1/16	6 3/4	12 1/4	4 1/4	11 3/4	18 1/12	3	1 1/4	2 1/2	1/4 x 1/8 x 2 7/16	2 1/4	4 1/2	1/2 x 1/4 x 4 3/8
HE70	466	7	4 1/2	1/2-13	3/4	7 1/4	5 3/8	5 1/8	4	5 7/8	14 3/4	6	6 3/8	1 11/16	1 1/16	13	5	16 3/8	11 1/2	10 3/4	7 3/4	13 5/8	4 7/8	13 1/16	20 5/8	2 3/4	1 3/8	2 3/4	5/16 x 5/32 x 2 11/16	2 1/2	5	5/8 x 5/16 x 4 15/16
HE80	651	8	5	5/8-11	1	8 1/4	5 3/4	5 1/2	4 3/8	6 3/8	16 1/2	6 3/4	6 1/2	1 3/4	1 3/16	13 1/2	5 3/8	18	12 1/8	11 3/4	8 3/4	15 1/16	5 3/4	14 7/16	23	3	1 1/2	3	3/8 x 3/16 x 2 15/16	2 3/4	5 1/2	5/8 x 5/16 x 5 7/16
HE90	885	9	5 1/2	5/8-11	1	8 1/4	6 1/4	6 3/16	4 7/16	8 1/32	18 3/4	7 3/4	7 5/8	1 7/8	1 7/16	15 1/4	6	20 1/8	14 1/4	13 7/8	9 3/4	16 11/16	5 3/4	16 1/16	25 1/2	3 1/4	1 3/4	3 1/2	3/8 x 3/16 x 3 7/16	3 1/4	6 1/2	3/4 x 3/8 x 6 3/8
HE100	1178	10	6	5/8-11	1	10 1/4	6 3/4	6 1/2	5 1/4	7 5/8	21	8 3/4	8 5/8	2	1 7/16	17	6 3/8	22 1/4	16	15 1/8	10 3/4	18 11/16	6 3/4	18	27 7/8	3 1/2	1 7/8	3 3/4	1/2 x 1/4 x 3 11/16	3 5/8	7 1/4	7/8 x 7/16 x 7 3/16
HE120	1651	12	7	5/8-11	1	10 1/4	7 1/2	7 5/16	5 11/16	8 3/4	24 5/8	10 1/2	8 7/8	2 1/8	1 9/16	18 1/2	7 1/8	25 5/8	17 1/2	17 1/16	13 1/4	21 5/8	7	20 11/16	33	4	2 1/8	4 1/4	1/2 x 1/4 x 4 3/16	4 1/4	8 1/2	1 x 1/2 x 8 3/8
HE140	2481	14	7	5/8-11	1	10 1/4	9 1/2	7 5/16	5 11/16	8 3/4	27 1/2	11 1/2	10 1/8	2 1/4	1 11/16	21 3/4	8 3/4	32 5/8	19 1/4	20 11/16	15 3/8	28 3/8	7	23 15/16	39	4 1/2	2 1/8	4 1/4	1/2 x 1/4 x 4 3/16	5	9	1 1/4 x 5/8 x 8 5/8

All dimensions are in inches. Use certified prints for construction. The input shaft may be rotated in either direction. Standard gear sets are cut with right hand threads giving relative shaft rotations as shown above. Shaft arrangements are shown above. Desired assembly should be specified when ordering. Standard keys are furnished with units.

▲ Tolerances: 1 1/2" Diameter or Less = +.0000" -.0005"
Over 1 1/2" Diameter = +.000" -.001"

Low input speeds require special order instructions. See introductory section.

Dimensions for "Sugar Scoop" Motor Mounts for Type HEK

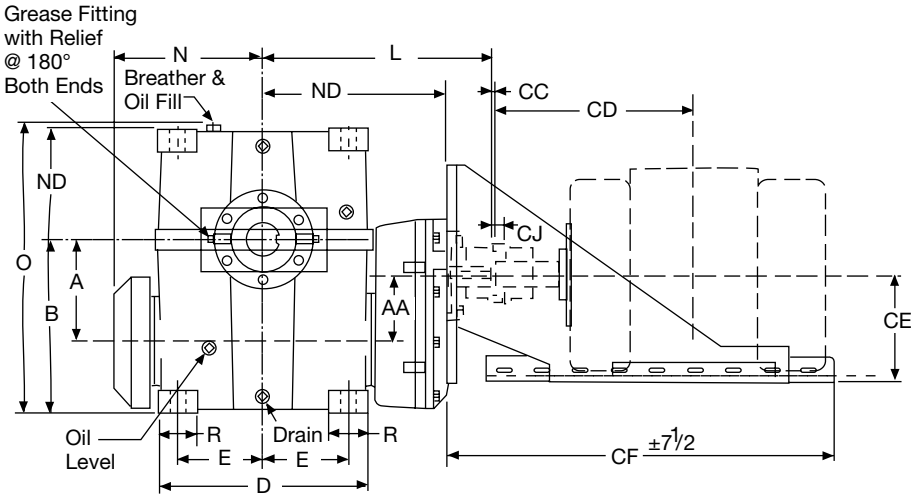

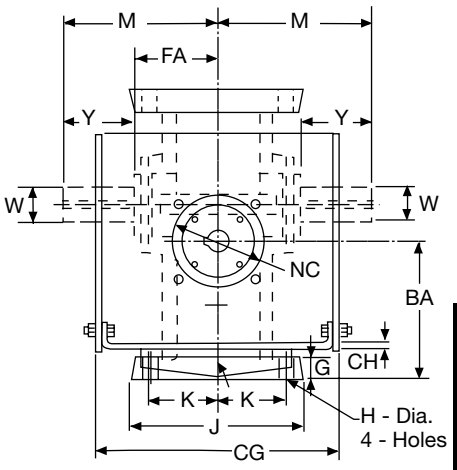

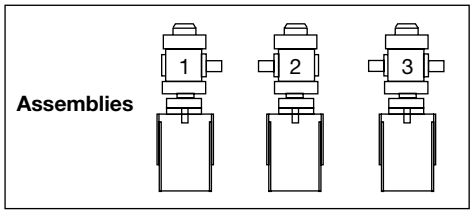

Motor Frame Size	CJ									
	35	40	50	60	70	80	90	100	120	140
143T	3/8	3/8	3/8							
145T	3/8	3/8	3/8							
182T	3/8	3/8	3/8	5/8	5/8	5/8				
184T	3/8	3/8	3/8	5/8	5/8	5/8	7/8			
213T		5/8	5/8	5/8	5/8	5/8	7/8	7/8		
215T		5/8	5/8	5/8	5/8	5/8	7/8	7/8	1 5/16	
254T				3/4	3/4	5/8	7/8	7/8	1 5/16	1 5/16
256T				3/4	3/4	5/8	7/8	7/8	1 5/16	1 5/16
284T					7/8	7/8	7/8	7/8	1 5/16	1 5/16
286T					7/8	7/8	7/8	7/8	1 5/16	1 5/16
324T						1 5/16	1 5/16	1 5/16	1 5/16	1 5/16
326T							1 5/16	1 5/16	1 5/16	1 5/16
364T								1 1/4	1 1/4	1 1/4
365T								1 1/4	1 1/4	1 1/4
404T									1 7/8	1 7/8
405T										1 7/8

Motor Frame Size	CC	CD	CE	CF ±7 1/2	CG	CH
143T	1/8	6 1/2	4 7/8	25	12 5/8	3/16
145T	1/8	7	4 7/8	25	12 5/8	3/16
182T	1/8	7 3/4	4 7/8	25	12 5/8	3/16
184T	1/8	8 1/4	4 7/8	25	12 5/8	3/16
213T	1/8	9 5/8	5 9/16	28	12 3/4	1/4
215T	1/8	10 3/8	5 9/16	28	12 3/4	1/4
254T	1/8	12 3/8	6 5/8	31	15	5/16
256T	1/8	13 1/4	6 5/8	31	15	5/16
284T	1/8	14 1/8	7 5/8	31	17	5/16
286T	1/8	14 7/8	7 5/8	31	17	5/16
324T	1/8	15 3/4	8 1/2	35 1/4	19 1/16	3/8
326T	1/8	16 1/2	8 1/2	35 1/4	19 1/16	3/8
364T	1/8	17 3/8	9 1/2	35 1/4	21 5/16	3/8
365T	1/8	17 7/8	9 1/2	35 1/4	21 5/16	3/8
404T	1/8	20	10 1/2	35 1/4	23 5/16	3/8
405T	1/8	20 3/4	10 1/2	35 1/4	23 5/16	3/8

Unit Size	A	AA	B	BA	D	E	FA	G	H	J	K	L	M	N	NB	NC	ND	O	R	T▲	U	Keyway	W▲	Y	Keyway
HEK-35	3 1/2	2 1/2	6 7/8	5 7/8	9	3 7/8	4 1/8	7/8	11/16	8 1/4	3 3/8	10 5/8	7 1/8	7 1/16	5 3/8	5 1/8	8 1/8	12 1/4	2	3/4	2	3/16 x 3/32 x 1 15/16	1 1/2	3	3/8 x 3/16 x 2 15/16
HEK-40	4	3	8 1/4	7 1/4	10 1/4	4 1/4	5	7/8	13/16	10	4	11 9/16	8 1/2	8 1/16	6	5 1/8	9 1/16	14 1/4	2 3/8	7/8	2	3/16 x 3/32 x 1 15/16	1 3/4	3 1/2	3/8 x 3/16 x 3 7/16
HEK-50	5	3 1/2	9 5/8	8 1/8	11 3/8	4 3/4	5 1/2	1 1/2	13/16	10 3/4	4 3/8	12 5/8	9 5/8	8 5/8	5 3/4	6 3/8	9 7/8	15 7/8	2	1 1/8	2 1/4	1/4 x 1/8 x 2 3/16	2	4	1/2 x 1/4 x 3 7/8
HEK-60	6	4	11	9	13 1/2	5 1/4	6 1/8	1 11/16	15/16	12 1/4	4 3/4	14 3/4	10 3/4	10 1/16	6 3/4	6 3/8	11 3/4	18 1/2	3	1 1/4	2 1/2	1/4 x 1/8 x 2 7/16	2 1/4	4 1/2	1/2 x 1/4 x 4 3/8
HEK-70	7	4 1/2	12 3/8	9 7/8	14 3/4	6	6 3/8	1 11/16	1 1/16	13	5	16 3/8	11 1/2	10 3/4	7 3/4	6 3/8	13 1/16	20 5/8	2 3/4	1 3/8	2 3/4	5/16 x 5/32 x 2 11/16	2 1/2	5	5/8 x 5/16 x 4 15/16
HEK-80	8	5	13 3/4	10 3/4	16 1/2	6 3/4	6 1/2	1 3/4	1 3/16	13 1/2	5 3/8	18	12 1/8	11 3/4	8 3/4	7 3/16	14 7/16	23	3	1 1/2	3	3/8 x 3/16 x 2 15/16	2 3/4	5 1/2	5/8 x 5/16 x 5 7/16
HEK-90	9	5 1/2	15 1/4	11 3/4	18 3/4	7 3/4	7 5/8	1 7/8	1 7/16	15 1/4	6	20 1/8	14 1/4	13 15/16	9 3/4	7 3/16	16 1/16	25 1/2	3 1/4	1 3/4	3 1/2	3/8 x 3/16 x 3 7/16	3 1/4	6 1/2	3/4 x 3/8 x 6 3/8
HEK-100	10	6	16 3/4	12 3/4	21	8 3/4	8 5/8	2	1 7/16	17	6 3/8	22 1/4	16	14 7/8	10 3/4	9 3/16	18	27 7/8	3 1/2	1 7/8	3 3/4	1/2 x 1/4 x 3 11/16	3 5/8	7 1/4	7/8 x 7/16 x 7 3/16
HEK-120	12	7	19 1/2	14 1/2	24 5/8	10 1/2	8 7/8	2 1/8	1 9/16	18 1/2	7 1/8	25 5/8	17 1/2	16 5/8	13 1/4	9 3/16	20 11/16	33	4	2 1/8	4 1/4	1/2 x 1/4 x 4 3/16	4 1/4	8 1/2	1 x 1/2 x 8 3/8
HEK-140	14	7	23 1/2	16 1/2	27 1/2	11 1/2	10 1/8	2 1/4	1 11/16	21 3/4	8 3/4	32 5/8	19 1/4	20 11/16	15 3/8	9 3/16	23 15/16	39	4 1/2	2 1/8	4 1/4	1/2 x 1/4 x 4 3/16	5	9	1 1/4 x 5/8 x 8 5/8

All dimensions are in inches. Use certified prints for construction. The input shaft may be rotated in either direction. Standard gear sets are cut with right hand threads giving relative shaft rotations as shown above. Shaft arrangements are shown above. Desired assembly should be specified when ordering. Standard keys are furnished with units.

▲ Tolerances: 1 1/2" Diameter or Less = +.0000" -.0005"
Over 1 1/2" Diameter = +.000" -.001"

Low input speeds require special order instructions. See introductory section.

Dimensions Type HV • Vertical

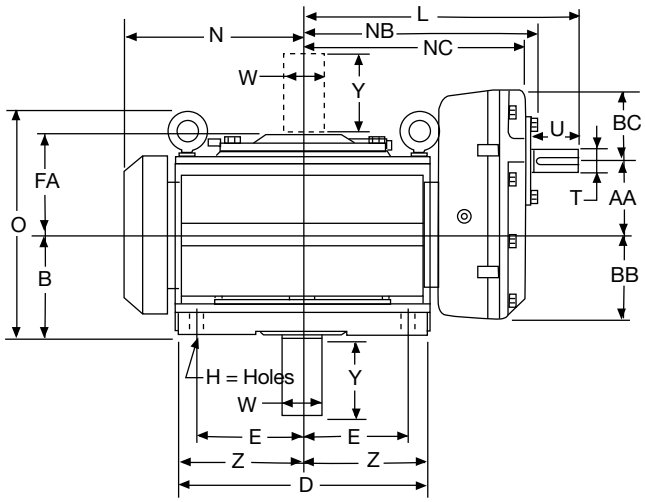

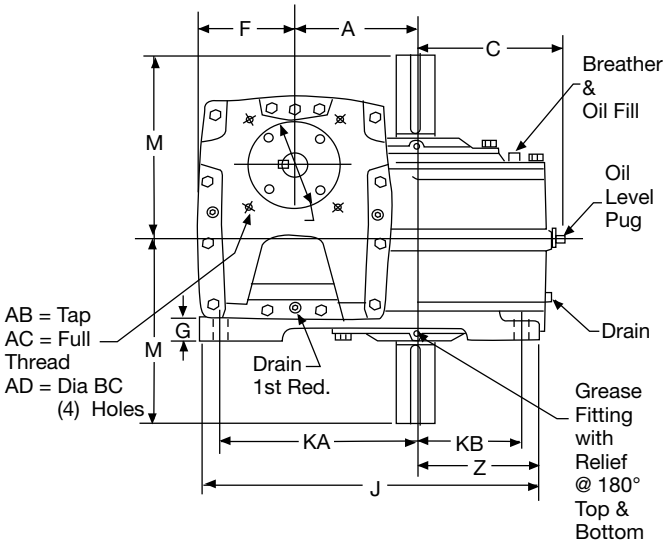

Assemblies

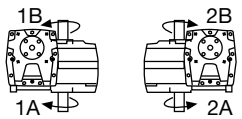

Helical Shaft Input Positions

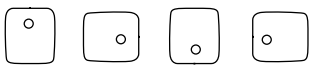

A drywell is standard for vertical assemblies sizes 30-200 only.

Unit Size	WT. LBS.	A	AA	AB	AC	AD	B	BB	BC	C	D	E	F	FA	G	H	J	KA	KB	L	M	N	NB	NC	ND	O	T▲	U	Keyway	W▲	Y	Keyway	Z
HV35	125	3 1/2	2 1/2	3/8-16	5/8	5 3/4	4 1/8	3 1/8	2 3/4	4 13/16	8 3/8	3 1/2	3 5/8	4	7/8	11/16	11 3/4	6 7/8	3 1/2	10 5/8	7 1/8	6 5/8	8 5/8	8 1/8	3 5/16	9 1/8	3/4	2	3/16 x 3/32 x 1 15/16	1 1/2	3	3/8 x 3/16 x 2 15/16	4 3/16
HV40	190	4	3	3/8 -16	5/8	5 3/4	5	3 1/2	2 7/8	5 3/8	9 1/4	3 7/8	4	4 7/8	1 1/8	11/16	13 1/8	7 5/8	3 7/8	11 9/16	8 1/2	7 3/4	9 9/16	9 1/8	3 5/16	10 1/2	7/8	2	3/16 x 3/32 x 1 15/16	1 3/4	3 1/2	3/8 x 3/16 x 3 7/16	4 5/8
HV50	285	5	3 1/2	1/2 -13	3/4	7 1/4	5 5/8	4	3 1/2	7 1/2	11 1/8	4 3/4	4 5/8	5 1/2	1 1/4	13/16	15 3/8	9	4 3/4	12 5/8	9 5/8	8 5/8	10 3/8	9 7/8	4 1/4	12 9/16	1 1/8	2 1/4	1/4 x 1/8 x 2 3/16	2	4	1/2 x 1/4 x 3 7/8	5 9/16
HV60	400	6	4	1/2 -13	3/4	7 1/4	6 1/4	4 3/4	3 5/8	8 5/8	13 3/8	5 3/4	5 1/2	6 1/8	1 3/8	13/16	18 1/8	10 1/2	5 3/4	14 3/4	10 3/4	10 1/16	12 1/4	11 3/4	4 1/4	13 7/16	1 1/4	2 1/2	1/4 x 1/8 x 2 7/16	2 1/4	4 1/2	1/2 x 1/4 x 4 3/8	6 11/16
HV70	575	7	4 1/2	1/2 -13	3/4	7 1/4	6 1/2	5 1/8	4	9 1/4	14 5/8	6 1/4	5 7/8	6 7/16	1 3/8	15/16	20 1/8	11 3/4	6 1/4	16 3/8	11 1/2	10 3/4	13 5/8	13 1/16	4 7/8	14	1 3/8	2 3/4	5/16 x 5/32 x 2 11/16	2 1/2	5	5/8 x 5/16 x 4 15/16	7 5/16
HV80	695	8	5	5/8 -11	1	8 1/4	6 5/8	5 1/2	4 3/8	10 1/2	16 1/2	7	6 3/8	6 1/2	1 1/2	1 1/16	22 1/4	12 3/4	7	18	12 1/8	11 3/4	15 1/16	14 7/16	5 3/4	14 7/8	1 1/2	3	3/8 x 3/16 x 2 15/16	2 3/4	5 1/2	5/8 x 5/16 x 5 7/16	8 1/4
HV90	905	9	5 1/2	5/8 -11	1	8 1/4	7 3/4	6 3/16	4 7/16	11 3/8	18 1/2	7 7/8	8 1/32	7 5/8	1 5/8	1 3/16	25	14 3/8	7 7/8	20 1/8	14 1/4	13 13/16	16 11/16	16 1/16	5 3/4	17	1 3/4	3 1/2	3/8 x 3/16 x 3 7/16	3 1/4	6 1/2	3/4 x 3/8 x 6 3/8	9 1/4
HV100	1180	10	6	5/8 -11	1	10 1/4	8 3/4	6 1/2	5 1/4	12 5/8	20 3/4	9	7 5/8	8 5/8	1 3/4	1 3/16	27 1/4	15 1/2	9	22 1/4	16	15 1/8	18 11/16	18	6 3/4	18 1/2	1 7/8	3 3/4	1/2 x 1/4 x 3 11/16	3 5/8	7 1/4	7/8 x 7/16 x 7 3/16	10 3/8
HV120	1800	12	7	5/8 -11	1	10 1/4	9	7 5/16	5 11/16	14 5/8	24 1/2	10 3/8	8 3/4	8 7/8	2 1/8	1 5/16	32 3/8	18 1/2	10 3/8	25 5/8	17 1/2	17	21 5/8	20 11/16	7	19 1/2	2 1/8	4 1/4	1/2 x 1/4 x 4 3/16	4 1/4	8 1/2	1 x 1/2 x 8 3/8	12 1/8
HV140	2550	14	7	5/8 -11	1	10 1/4	10 1/4	7 5/16	5 11/16	16 5/8	27 1/2	12	8 3/4	9 7/8	2 1/4	1 5/16	37 1/2	22	12	32 5/8	19 1/4	20 11/16	28 3/8	23 15/16	7	21 3/4	2 1/8	4 1/4	1/2 x 1/4 x 4 3/16	5	9	1 1/4 x 5/8 x 8 5/8	13 3/4
HV170	3570	17	10	–	–	–	11 1/2	11 1/2	8	19 1/2	33	14 1/2	14 3/4	11 1/8	2 1/2	1 9/16	44 3/4	26 1/4	14 1/2	41 3/8	21 1/2	22 3/4	36 3/8	–	9 5/16	24 3/4	2 1/2	5	5/8 x 5/16 x 4 15/16	5 3/4	10	1 1/2 x 3/4 x 9 3/4	16 1/2
HV200	4950	20	10	–	–	–	12 3/4	11 1/2	8	22 1/2	39	17	14 3/4	12 7/8	2 3/4	1 9/16	53	31	17	43 1/4	23 3/4	26	38 1/4	–	9 5/16	27 1/4	2 1/2	5	5/8 x 5/16 x 4 15/16	6 1/2	11	1 1/2 x 3/4 x 10 1/2	19 1/2

All dimensions are in inches. Use certified prints for construction. The input shaft may be rotated in either direction. Standard gear sets are cut with right hand threads giving relative shaft rotations as shown above. Shaft arrangements are shown above. Desired assembly should be specified when ordering. Standard keys are furnished with units.

▲ Tolerances: 1½" Diameter or Less = +.0000" -.0005"
Over 1½" Diameter = +.000" -.001"

Low input speeds require special order instructions. See introductory section.

Dimensions for "Sugar Scoop" Motor Mounts for Type HVK

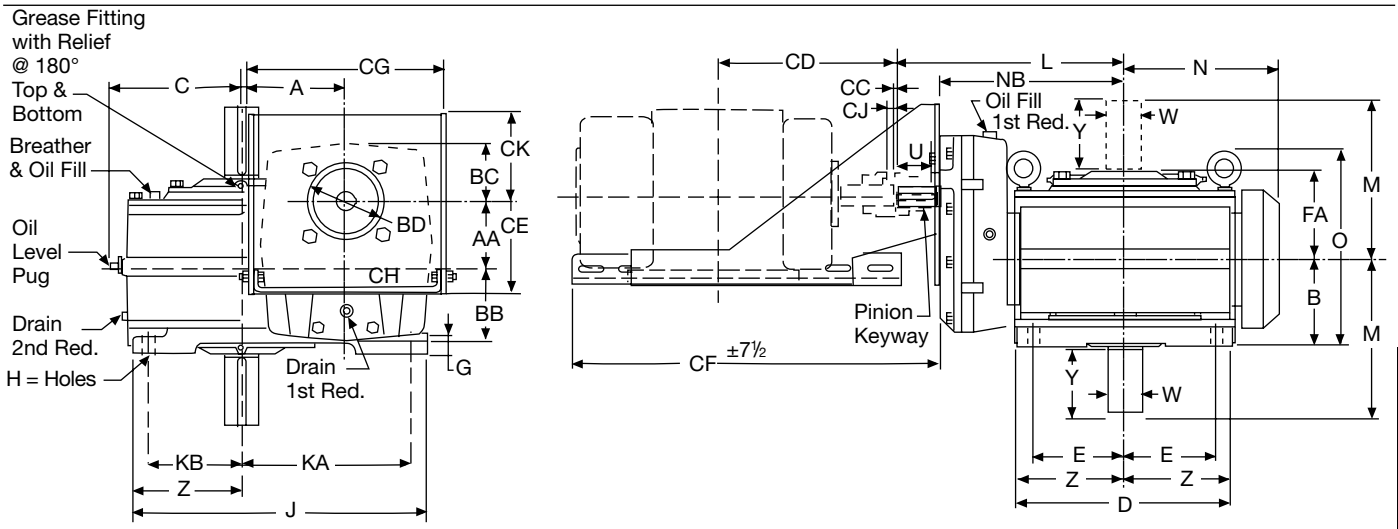

A drywell is standard for vertical assemblies sizes 30-200 only.

Assemblies

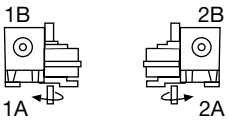

Helical Shaft Input Positions

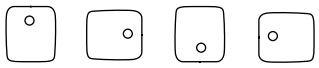

Motor Frame Size	CJ											
	35	40	50	60	70	80	90	100	120	140	170	200
143T	3/8	3/8	3/8									
145T	3/8	3/8	3/8									
182T	3/8	3/8	3/8	5/8	5/8	5/8						
184T	3/8	3/8	3/8	5/8	5/8	5/8	7/8					
213T		5/8	5/8	5/8	5/8	5/8	7/8	7/8				
215T		5/8	5/8	5/8	5/8	5/8	7/8	7/8	1 5/16			
254T				3/4	3/4	3/4	7/8	7/8	1 5/16	1 5/16	1 3/8	1 3/8
256T				3/4	3/4	3/4	7/8	7/8	1 5/16	1 5/16	1 3/8	1 3/8
284T					7/8	7/8	7/8	7/8	1 5/16	1 5/16	1 3/8	1 3/8
286T					7/8	7/8	7/8	7/8	1 5/16	1 5/16	1 3/8	1 3/8
324T						1 5/16	1 5/16	1 5/16	1 5/16	1 5/16	1 3/8	1 3/8
326T							1 5/16	1 5/16	1 5/16	1 5/16	1 3/8	1 3/8
364T								1 1/4	1 1/4	1 1/4	1 3/8	1 3/8
365T								1 1/4	1 1/4	1 1/4	1 3/8	1 3/8
404T									1 7/8	1 7/8	1 7/8	1 7/8
405T										1 7/8	1 7/8	1 7/8

Motor Frame Size	CC	CD	CE	CF ±7 1/2	CG	CH	CK
143T	1/8	6 1/2	4 7/8	25	12 5/8	3/16	4 7/8
145T	1/8	7	4 7/8	25	12 5/8	3/16	4 7/8
182T	1/8	7 3/4	4 7/8	25	12 5/8	3/16	4 7/8
184T	1/8	8 1/4	4 7/8	25	12 5/8	3/16	4 7/8
213T	1/8	9 5/8	5 9/16	28	12 3/4	1/4	5
215T	1/8	10 3/8	5 9/16	28	12 3/4	1/4	5
254T	1/8	12 3/8	6 5/8	31	15	5/16	6 5/8
256T	1/8	13 1/4	6 5/8	31	15	5/16	6 5/8
284T	1/8	14 1/8	7 5/8	31	17	5/16	7 5/8
286T	1/8	14 7/8	7 5/8	31	17	5/16	7 5/8
324T	1/8	15 3/4	8 1/2	35 1/4	19 1/16	3/8	8 1/2
326T	1/8	16 1/2	8 1/2	35 1/4	19 1/16	3/8	8 1/2
364T	1/8	17 3/8	9 1/2	35 1/4	21 5/16	3/8	9 1/2
365T	1/8	17 7/8	9 1/2	35 1/4	21 5/16	3/8	9 1/2
404T	1/8	20	10 1/2	35 1/4	23 5/16	3/8	10 1/2
405T	1/8	20 3/4	10 1/2	35 1/4	23 5/16	3/8	10 1/2

Unit Size	A	AA	B	BB	BC	BD	C	D	E	FA	G	H	J	KA	KB	L	M	N	NB	O	T▲	U	Keyway	W▲	Y	Keyway	Z
HVK-35	3 1/2	2 1/2	4 1/8	3 1/8	2 3/4	5 1/8	4 13/16	8 3/8	3 1/2	4	7/8	11/16	11 3/4	6 7/8	3 1/2	10 5/8	7 1/8	6 5/8	8 1/8	9 1/8	3/4	2	3/16 x 3/32 x 1 15/16	1 1/2	3	3/8 x 3/16 x 2 15/16	4 3/16
HVK-40	4	3	5	3 1/2	2 7/8	5 1/8	5 3/8	9 1/4	3 7/8	4 7/8	1 1/8	11/16	13 1/8	7 5/8	3 7/8	11 9/16	8 1/8	7 3/4	9 1/8	10 1/2	7/8	2	3/16 x 3/32 x 1 15/16	1 3/4	3 1/2	3/8 x 3/16 x 3 7/16	4 5/8
HVK-50	5	3 1/2	5 5/8	4	3 1/2	6 3/8	7 1/2	11 1/8	4 3/4	5 1/2	1 1/4	13/16	15 3/8	9	4 3/4	12 5/8	9 5/8	8 5/8	9 7/8	12 9/16	1 1/8	2 1/4	1/4 x 1/8 x 2 3/16	2	4	1/2 x 1/4 x 3 7/8	5 9/16
HVK-60	6	4	6 1/4	4 3/4	3 5/8	6 3/8	8 5/8	13 3/8	5 3/4	6 1/8	1 3/8	13/16	18 1/8	10 1/2	5 3/4	14 3/4	10 3/4	10 1/16	11 3/4	13 7/16	1 1/4	2 1/2	1/4 x 1/8 x 2 7/16	2 1/4	4 1/2	1/2 x 1/4 x 4 3/8	6 11/16
HVK-70	7	4 1/2	6 1/2	5 1/8	4	6 3/8	9 1/4	14 5/8	6 1/4	6 7/16	1 3/8	15/16	20 1/8	11 3/4	6 1/4	16 3/8	11 1/2	10 3/4	13 1/16	14	1 3/8	2 3/4	5/16 x 5/32 x 2 11/16	2 1/2	5	5/8 x 5/16 x 4 15/16	7 5/16
HVK-80	8	5	6 5/8	5 1/2	4 3/8	7 3/16	10 1/2	16 1/2	7	6 1/2	1 1/2	1 1/16	22 1/4	12 3/4	7	18	12 1/8	11 3/4	14 7/16	14 7/8	1 1/2	3	3/8 x 3/16 x 2 15/16	2 3/4	5 1/2	5/8 x 5/16 x 5 7/16	8 1/4
HVK-90	9	5 1/2	7 3/4	6 3/16	4 7/16	7 3/16	11 3/8	18 1/2	7 7/8	7 5/8	1 5/8	1 3/16	25	14 3/8	7 7/8	20 1/8	14 1/4	13 13/16	16 1/16	17	1 3/4	3 1/2	3/8 x 3/16 x 3 7/16	3 1/4	6 1/2	3/4 x 3/8 x 6 3/8	9 1/4
HVK-100	10	6	8 3/4	6 1/2	5 1/4	9 3/16	12 5/8	20 3/4	9	8 5/8	1 3/4	1 3/16	27 1/4	15 1/2	9	22 1/4	16	15 1/8	18	18 1/2	1 7/8	3 3/4	1/2 x 1/4 x 3 11/16	3 5/8	7 1/4	7/8 x 7/16 x 7 3/16	10 3/8
HVK-120	12	7	9	7 5/16	5 11/16	9 3/16	14 5/8	24 1/2	10 3/8	8 7/8	2 1/8	1 5/16	32 3/8	18 1/2	10 3/8	25 5/8	17 1/2	17	20 11/16	19 1/2	2 1/8	4 1/4	1/2 x 1/4 x 4 3/16	4 1/4	8 1/2	1 x 1/2 x 8 3/8	12 1/8
HVK-140	14	7	10 1/4	7 5/16	5 11/16	9 3/16	16 5/8	27 1/2	12	9 7/8	2 1/4	1 5/16	37 1/2	22	12	32 5/8	19 1/4	20 11/16	23 15/16	21 3/4	2 1/8	4 1/4	1/2 x 1/4 x 4 3/16	5	9	1 1/4 x 5/8 x 8 5/8	13 3/4
HVK-170	17	10	11 1/2	11 1/2	8	–	19 1/2	33	14 1/2	11 1/8	2 1/2	1 9/16	44 3/4	26 1/4	14 1/2	41 3/8	21 1/2	22 3/4	32 3/16	24 3/4	2 1/2	5	5/8 x 5/16 x 4 15/16	5 3/4	10	1 1/2 x 3/4 x 9 3/4	16 1/2
HVK-200	20	10	12 3/4	11 1/2	8	–	22 1/2	39	17	12 7/8	2 3/4	1 9/16	53	31	17	43 1/4	23 3/4	26	34 1/16	27 1/4	2 1/2	5	5/8 x 5/16 x 4 15/16	6 1/2	11	1 1/2 x 3/4 x 10 1/2	19 1/2

All dimensions are in inches. Use certified prints for construction. The input shaft may be rotated in either direction. Standard gear sets are cut with right hand threads giving relative shaft rotations as shown above. Shaft arrangements are shown above. Desired assembly should be specified when ordering. Standard keys are furnished with units.

▲ Tolerances: 1½" Diameter or Less = +.0000" -.0005"
Over 1½" Diameter = +.000" -.001"

Low input speeds require special order instructions. See introductory section.

Dimensions Type HSM • Horizontal and Vertical

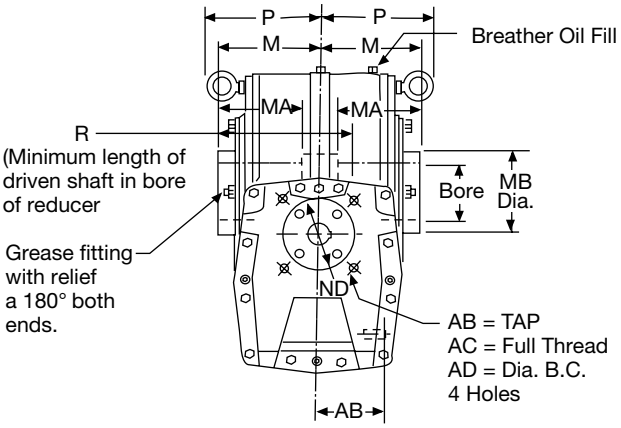

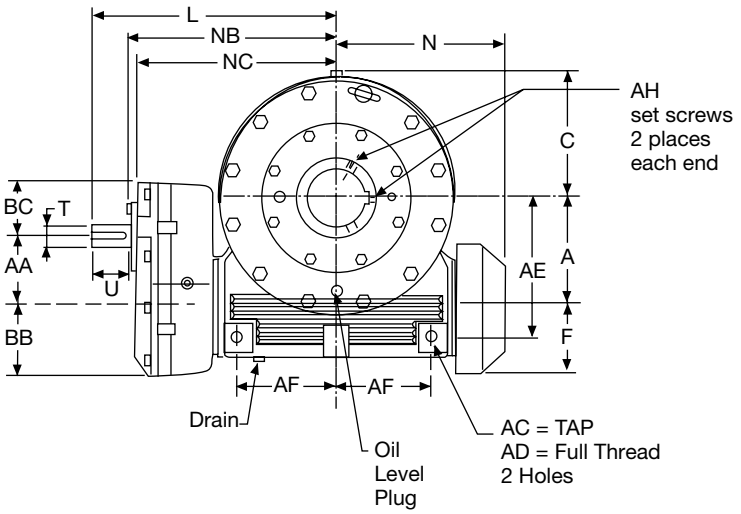

Special Note:
Unit sizes 140, 170 & 200 will be supplies with a fan mounted on input shaft. Allowance has been made in L & NB dimensions.

Horizontal Assemblies

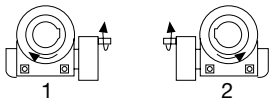

Vertical Assemblies

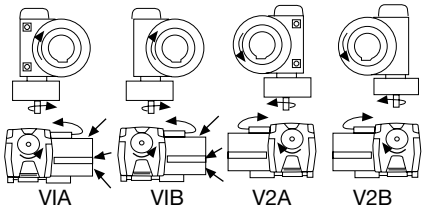

Helical Shaft Input Positions

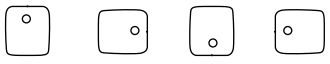

A drywell is standard for vertical assemblies sizes 60-200 only.

Unit Size	WT. LBS.	A	AA	AB	AC	AD	AE	AF	AG	AH	AJ	AK	BB	BC	C	F	L	M	MA	MB	N	NB	NC	ND	P	R	T▲	U	Keyway	Bore	Keyway
HSM35	115	3 1/2	2 1/2	3	1/2-13	3/4	5 1/8	3 1/2	3/8-16	3/8-16	5/8	5 3/4	3 1/8	2 3/4	4 13/16	2 5/8	10 5/8	4 11/16	4 1/8	3 1/8	6 5/8	8 5/8	8 1/8	3 5/16	5	5 3/4	3/4	2	3/16 x 3/32 x 1 15/16	2.1885 / 2.1905	1/2 x 1/4
HSM40	175	4	3	3 1/2	5/8-11	1	5 3/4	3 7/8	3/8-16	3/8-16	5/8	5 3/4	3 1/2	2 7/8	5 3/8	3 1/4	11 9/16	5 5/16	4 11/16	3 1/2	7 3/4	9 9/16	9 1/8	3 5/16	5 1/2	6 7/16	7/8	2	3/16 x 3/32 x 1 15/16	2.438 / 2.440	5/8 x 5/16
HSM50	260	5	3 1/2	4	3/4-10	1 1/4	7	4 3/4	1/2-13	1/2-13	3/4	7 1/4	4	3 1/2	7 1/2	3 11/16	12 5/8	5 7/8	5 1/4	4 3/16	8 5/8	10 3/8	9 7/8	4 1/4	6 15/16	7	1 1/8	2 1/4	1/4 x 1/8 x 2 13/16	2.938 / 2.940	3/4 x 3/8
HSM60	360	6	4	4 1/4	3/4-10	1 1/8	8 1/2	5 3/4	1/2-13	1/2-13	3/4	7 1/4	4 3/4	3 5/8	8 5/8	4 1/8	14 3/4	6 1/2	5 3/4	4 3/4	10 1/16	12 1/4	11 3/4	4 1/4	7 3/16	7 3/4	1 1/4	2 1/2	1/4 x 1/8 x 2 7/16	3.438 / 3.440	7/8 x 7/16
HSM70	525	7	4 1/2	4 1/2	7/8-9	1 3/8	9 3/8	6 1/4	1/2-13	1/2-13	3/4	7 1/4	5 1/8	4	9 1/4	5 3/16	16 3/8	6 3/4	5 7/8	5 1/2	10 3/4	13 5/8	13 1/16	4 7/8	7 1/2	8 1/8	1 3/8	2 3/4	5/16 x 5/32 x 2 11/16	3.938 / 3.940	1 x 1/2
HSM80	650	8	5	4 5/8	1-8	1 1/2	10 1/4	7	5/8-11	1/2-13	1	8 1/4	5 1/2	4 3/8	10 1/2	5 3/16	18	7 1/4	6 1/4	6 1/4	11 3/4	15 1/16	14 7/16	5 3/4	8 1/4	8 3/4	1 1/2	3	3/8 x 3/16 x 2 15/16	4.438 / 4.440	1 x 1/2
HSM90	855	9	5 1/2	5 5/8	1-8	1 1/2	11 1/2	7 7/8	5/8-11	1/2-13	1	8 1/4	6 3/16	4 7/16	11 3/8	6 3/16	20 1/8	8 1/4	7 1/8	7	13 13/16	16 11/16	16 1/16	5 3/4	9 1/4	9 7/8	1 3/4	3 1/2	3/8 x 3/16 x 3 7/16	4.938 / 4.940	1 1/4 x 7/16
HSM100	1150	10	6	6 1/8	1-8	1 1/2	12 3/4	9	5/8-11	5/8-11	1	10 1/4	6 1/2	5 1/4	12 5/8	6 3/16	22 1/4	9 1/4	8	7 1/2	15 1/8	18 11/16	18	6 3/4	9 3/4	11	1 7/8	3 3/4	1/2 x 1/4 x 3 11/16	5.438 / 5.440	1 1/4 x 7/16
HSM120	1500	12	7	6 1/2	1 1/4-7	2	15 1/4	10 3/8	5/8-11	5/8-11	1	10 1/4	7 5/16	5 11/16	14 5/8	6 3/16	25 5/8	9 3/4	8 3/8	8	17	21 5/8	20 11/16	7	10 1/2	11 5/8	2 1/8	4 1/4	1/2 x 1/4 x 4 3/16	6.000 / 6.002	1 1/2 x 1/2
HSM140	2100	14	7	7 1/2	1 1/4-7	2 1/8	18 1/2	12	5/8-11	5/8-11	1	10 1/4	7 5/16	5 11/16	16 5/8	7 11/16	32 5/8	10 3/4	9	8	20 11/16	28 3/8	23 15/16	7	11 1/2	13	2 1/8	4 1/4	1/2 x 1/4 x 4 3/16	6.000 / 6.002	1 1/2 x 1/2
HSM170	3350	17	10	8 1/2	1 1/2-6	2 1/4	22	14 1/2	–	5/8-11	–	–	11 1/2	8	19 1/2	8 3/16	41 3/8	12 1/4	10 1/4	9 1/4	22 3/4	36 3/8	–	9 5/16	13 1/4	14 3/4	2 1/2	5	5/8 x 5/16 x 4 15/16	6.500 / 6.502	1 1/2 x 1/2
HSM200	4800	20	10	9 1/2	1 1/2-6	2 1/4	26	16 1/4	–	5/8-11	–	–	11 1/2	8	22 1/2	10 1/4	43 1/4	13 1/2	10 1/2	9 1/4	26	38 1/4	–	9 5/16	14 1/2	16	2 1/2	5	5/8 x 5/16 x 4 15/16	6.500 / 6.502	1 1/2 x 1/2

All dimensions are in inches. Use certified prints for construction. The input shaft may be rotated in either direction. Standard gear sets are cut with right hand threads giving relative shaft rotations as shown above. Shaft arrangements are shown above. Desired assembly should be specified when ordering. Standard keys are furnished with units.

▲ Tolerances: 1 1/2" Diameter or Less = +.0000" -.0005"
Over 1 1/2" Diameter = +.000" -.001"

Low input speeds require special order instructions. See introductory section.

Dimensions for "Sugar Scoop" Motor Mounts for Type HSMK

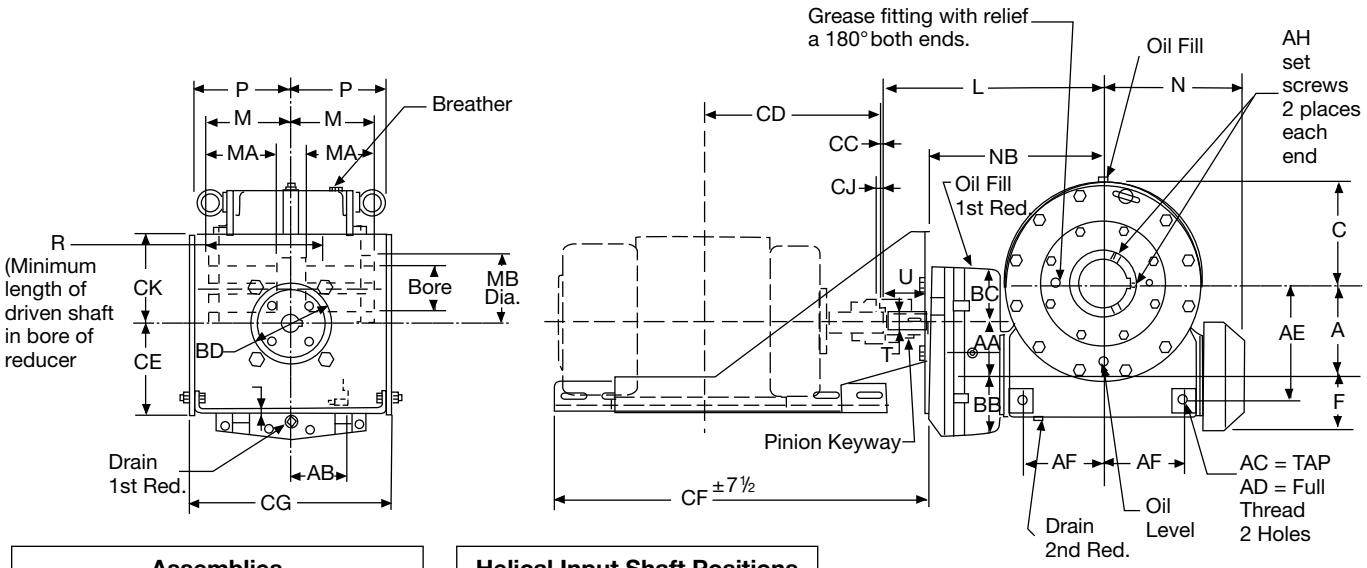

Assemblies

Helical Input Shaft Positions

A drywell is standard for vertical assemblies sizes 60-200 only.

Motor Frame Size	CJ											
	35	40	50	60	70	80	90	100	120	140	170	200
143T	3/8	3/8	3/8									
145T	3/8	3/8	3/8									
182T	3/8	3/8	3/8	5/8	5/8	5/8						
184T	3/8	3/8	3/8	5/8	5/8	5/8	7/8					
213T		5/8	5/8	5/8	5/8	5/8	7/8	7/8				
215T		5/8	5/8	5/8	5/8	5/8	7/8	7/8	1 5/16			
254T				3/4	3/4	3/4	7/8	7/8	1 5/16	1 5/16	1 3/8	1 3/8
256T				3/4	3/4	3/4	7/8	7/8	1 5/16	1 5/16	1 3/8	1 3/8
284T					7/8	7/8	7/8	7/8	1 5/16	1 5/16	1 3/8	1 3/8
286T					7/8	7/8	7/8	7/8	1 5/16	1 5/16	1 3/8	1 3/8
324T						1 5/16	1 5/16	1 5/16	1 5/16	1 5/16	1 3/8	1 3/8
326T							1 5/16	1 5/16	1 5/16	1 5/16	1 3/8	1 3/8
364T								1 1/4	1 1/4	1 1/4	1 3/8	1 3/8
365T								1 1/4	1 1/4	1 1/4	1 3/8	1 3/8
404T									1 7/8	1 7/8	1 7/8	1 7/8
405T										1 7/8	1 7/8	1 7/8

Motor Frame Size	CC	CD	CE	CF ±7½	CG	CH	CK
143T	1/8	6 1/2	4 7/8	25	12 5/8	3/16	4 7/8
145T	1/8	7	4 7/8	25	12 5/8	3/16	4 7/8
182T	1/8	7 3/4	4 7/8	25	12 5/8	3/16	4 7/8
184T	1/8	8 1/4	4 7/8	25	12 5/8	3/16	4 7/8
213T	1/8	9 5/8	5 9/16	28	12 3/4	1/4	5
215T	1/8	10 3/8	5 9/16	28	12 3/4	1/4	5
254T	1/8	12 3/8	6 5/8	31	15	5/16	6 5/8
256T	1/8	13 1/4	6 5/8	31	15	5/16	6 5/8
284T	1/8	14 1/8	7 5/8	31	17	5/16	7 5/8
286T	1/8	14 7/8	7 5/8	31	17	5/16	7 5/8
324T	1/8	15 3/4	8 1/2	35 1/4	19 1/16	3/8	8 1/2
326T	1/8	16 1/2	8 1/2	35 1/4	19 1/16	3/8	8 1/2
364T	1/8	17 3/8	9 1/2	35 1/4	21 5/16	3/8	9 1/2
365T	1/8	17 7/8	9 1/2	35 1/4	21 5/16	3/8	9 1/2
404T	1/8	20	10 1/2	35 1/4	23 5/16	3/8	10 1/2
405T	1/8	20 3/4	10 1/2	35 1/4	23 5/16	3/8	10 1/2

Unit Size	A	AA	AB	AC	AD	AE	AF	AH	BB	BC	BD	C	F	L	M	MA	MB	N	NB	P	R	T▲	U	Pinion Keyway	Bore	Bore Keyway
HSMK-35	3 1/2	2 1/2	3	1/2-13	3/4	5 1/8	3 1/2	3/8-16	3 1/8	2 3/4	5 1/8	4 13/16	2 5/8	10 5/8	4 11/16	4 1/8	3 1/8	6 5/8	8 1/8	5	5 3/4	3/4	2	3/16 x 3/32 x 1 15/16	2.1885 / 2.1905	1/2 Wide x 1/4 Deep
HSMK-40	4	3	3 1/2	5/8-11	1	5 3/4	3 7/8	3/8-16	3 1/2	2 7/8	5 1/8	5 3/8	3 1/4	11 9/16	5 5/16	4 11/16	3 1/2	7 3/4	9 1/8	5 1/2	6 7/16	7/8	2	3/16 x 3/32 x 1 15/16	2.438 / 2.440	5/8 Wide x 5/16 Deep
HSMK-50	5	3 1/2	4	3/4-10	1 1/4	7	4 3/4	1/2-13	4	3 1/2	6 3/8	7 1/2	3 11/16	12 5/8	5 7/8	5 1/4	4 3/16	8 5/8	9 7/8	6 15/16	7	1 1/8	2 1/4	1/4 x 1/8 x 2 3/16	2.938 / 2.940	3/4 Wide x 3/8 Deep
HSMK-60	6	4	4 1/4	3/4-10	1 1/8	8 1/2	5 3/4	1/2-13	4 3/4	3 5/8	6 3/8	8 5/8	4 1/8	14 3/4	6 1/2	5 3/4	4 3/4	10 1/16	11 3/4	7 3/16	7 3/4	1 1/4	2 1/2	1/4 x 1/8 x 2 7/16	3.438 / 3.440	7/8 Wide x 7/16 Deep
HSMK-70	7	4 1/2	4 1/2	7/8-9	1 3/8	9 3/8	6 1/4	1/2-13	5 1/8	4	6 3/8	9 1/4	5 3/16	16 3/8	6 3/4	5 7/8	5 1/2	10 3/4	13 1/16	7 1/2	8 1/8	1 3/8	2 3/4	5/16 x 5/32 x 2 11/16	3.938 / 3.940	1 Wide x 1/2 Deep
HSMK-80	8	5	4 5/8	1-8	1 1/2	10 1/4	7	1/2-13	5 1/2	4 3/8	7 3/16	10 1/2	5 3/16	18	7 1/4	6 1/4	6 1/4	11 3/4	14 7/16	8 1/4	8 3/4	1 1/2	3	3/8 x 3/16 x 2 15/16	4.438 / 4.440	1 Wide x 1/2 Deep
HSMK-90	9	5 1/2	5 5/8	1-8	1 1/2	11 1/2	7 1/8	1/2-13	6 3/16	4 7/16	7 3/16	11 3/8	6 3/16	20 1/8	8 1/4	7 1/8	7	13 13/16	16 1/16	9 1/4	9 7/8	1 3/4	3 1/2	3/8 x 3/16 x 3 7/16	4.938 / 4.940	1 1/4 Wide x 7/16 Deep
HSMK-100	10	6	6 1/8	1-8	1 1/2	12 3/4	9	5/8-11	6 1/2	5 1/4	9 3/16	12 5/8	6 3/16	22 1/4	9 1/4	8	7 1/2	15 1/8	18	9 3/4	11	1 7/8	3 3/4	1/2 x 1/4 x 3 11/16	5.438 / 5.440	1 1/4 Wide x 7/16 Deep
HSMK-120	12	7	6 1/2	1 1/4-7	2	15 1/4	10 3/8	5/8-11	7 5/16	5 11/16	9 3/16	14 5/8	6 3/16	25 5/8	9 3/4	8 3/8	8	17	20 11/16	10 1/2	11 5/8	2 1/8	4 1/4	1/2 x 1/4 x 4 3/16	6.000 / 6.002	1 1/2 Wide x 1/2 Deep
HSMK-140	14	7	7 1/2	1 1/4-7	2 1/8	18 1/2	12	5/8-11	7 5/16	5 11/16	9 3/16	16 5/8	7 11/16	32 5/8	10 3/4	9	8	20 11/16	23 15/16	11 1/2	13	2 1/8	4 1/4	1/2 x 1/4 x 4 3/16	6.000 / 6.002	1 1/2 Wide x 1/2 Deep
HSMK-170	17	10	8 1/2	1 1/2-6	2 1/4	22	14 1/2	5/8-11	11 1/2	8	–	19 1/2	8 3/16	41 3/8	12 1/4	10 1/4	9 1/4	22 3/4	32 3/16	13 1/4	14 3/4	2 1/2	5	5/8 x 5/16 x 4 15/16	6.500 / 6.502	1 1/2 Wide x 1/2 Deep
HSMK-200	20	10	9 1/2	1 1/2-6	2 1/4	26	16 1/4	5/8-11	11 1/2	8	–	22 1/2	10 1/4	43 1/4	13 1/2	10 1/2	9 1/4	26	34 1/16	14 1/2	16	2 1/2	5	5/8 x 5/16 x 4 15/16	6.500 / 6.502	1 1/2 Wide x 1/2 Deep

All dimensions are in inches. Use certified prints for construction. The input shaft may be rotated in either direction. Standard gear sets are cut with right hand threads giving relative shaft rotations as shown above. Shaft arrangements are shown above. Desired assembly should be specified when ordering. Standard keys are furnished with units.

▲ Tolerances: 1½" Diameter or Less = +.0000" -.0005"
Over 1½" Diameter = +.000" -.001"

Low input speeds require special order instructions. See introductory section.

Dimensions Type HSMB • Base Mount

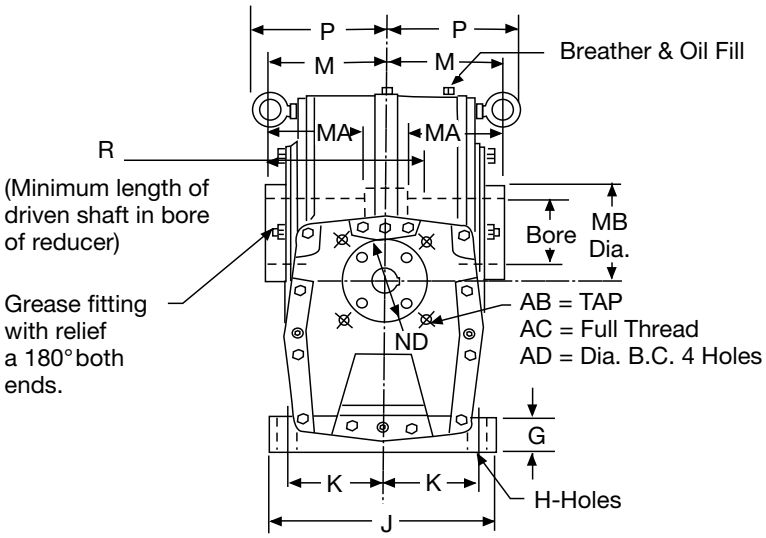

Special Note:
Unit sizes 140, 170 & 200 will be supplies with a fan mounted on input shaft. Allowance has been made in L & NB dimensions.

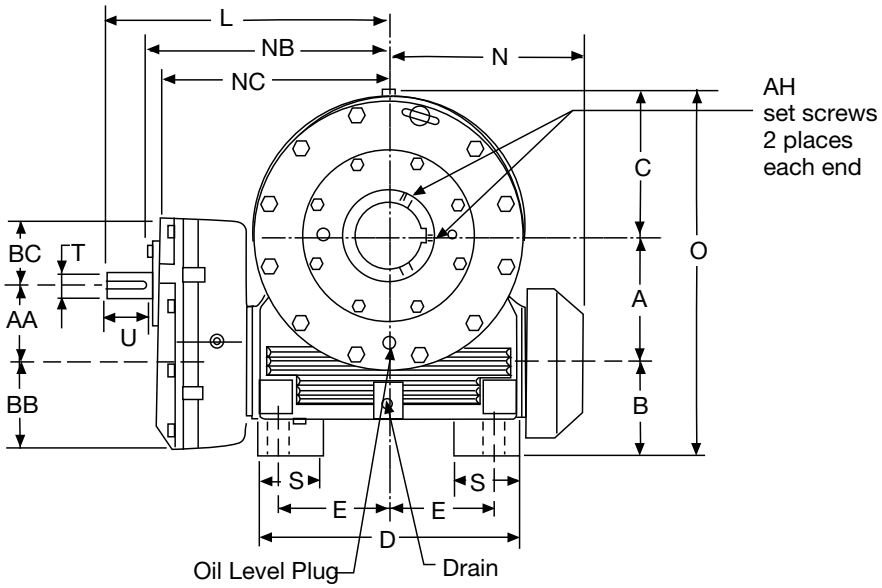

Helical Shaft Input Positions

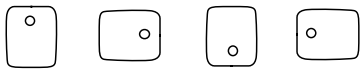

Unit Size	WT. LBS.	A	AA	AG	AH	AJ	AK	B	BB	BC	C	D	E	G	H	J	K	L	M	MA	MB	N	NB	NC	ND	O	P	R	S	T▲	U	Keyway	Bore	Key-way
HSMB35	142	3 1/2	2 1/2	3/8-16	3/8-16	5/8	5 3/4	3 3/8	3 1/8	2 3/4	4 13/16	9 1/4	3 7/8	1 1/8	11/16	9	3 3/4	10 5/8	4 11/16	4 1/8	3 1/8	6 5/8	8 5/8	8 1/8	3 5/16	11 11/16	5	5 3/4	2 1/4	3/4	2	3/16 x 3/32 x 1 15/16	2.1885 / 2.1905	1/2 x 1/4
HSMB40	225	4	3	3/8-16	3/8-16	5/8	5 3/4	4	3 1/2	2 7/8	5 3/8	10 3/8	4 1/4	1 1/2	13/16	10 1/2	4 3/8	11 9/16	5 5/16	4 11/16	3 1/2	7 3/4	9 9/16	9 1/8	3 5/16	13 3/8	5 1/2	6 7/16	2 1/2	7/8	2	3/16 x 3/32 x 1 15/16	2.438 / 2.440	5/8 x 5/16
HSMB50	320	5	3 1/2	1/2-13	1/2-13	3/4	7 1/4	4 5/8	4	3 1/2	7 1/2	11 1/2	4 3/4	1 3/4	13/16	12	4 7/8	12 5/8	5 7/8	5 1/4	4 3/16	8 5/8	10 3/8	9 7/8	4 1/4	17 1/8	6 15/16	7	3	1 1/8	2 1/4	1/4 x 1/8 x 2 13/16	2.938 / 2.940	3/4 x 3/8
HSMB60	455	6	4	1/2-13	1/2-13	3/4	7 1/4	5	4 3/4	3 5/8	8 5/8	13 1/4	5 1/4	1 1/2	15/16	13	5 1/4	14 3/4	6 1/2	5 3/4	4 3/4	10 1/16	12 1/4	11 3/4	4 1/4	19 5/8	7 3/16	7 3/4	3	1 1/4	2 1/2	1/4 x 1/8 x 2 7/16	3.438 / 3.440	7/8 x 7/16
HSMB70	640	7	4 1/2	1/2-13	1/2-13	3/4	7 1/4	5 3/8	5 1/8	4	9 1/4	14 3/4	6	2	1 1/16	14	5 5/8	16 3/8	6 3/4	5 7/8	5 1/2	10 3/4	13 5/8	13 1/16	4 7/8	21 5/8	7 1/2	8 1/8	3 1/2	1 3/8	2 3/4	5/16 x 5/32 x 2 11/16	3.938 / 3.940	1 x 1/2
HSMB80	780	8	5	5/8-11	1/2-13	1	8 1/4	5 3/4	5 1/2	4 3/8	10 1/2	16 1/2	6 3/4	2 1/4	1 3/16	14 1/2	6	18	7 1/4	6 1/4	6 1/4	11 3/4	15 1/16	14 7/16	5 3/4	24 1/4	8 1/4	8 3/4	4	1 1/2	3	3/8 x 3/16 x 2 15/16	4.438 / 4.440	1 x 1/2
HSMB90	1020	9	5 1/2	5/8-11	1/2-13	1	8 1/4	6 1/4	6 3/16	4 7/16	11 3/8	18 3/4	7 3/4	2 1/2	1 7/16	17 1/2	7 1/4	20 1/8	8 1/4	7 1/8	7	13 13/16	16 11/16	16 1/16	5 3/4	26 5/8	9 1/4	9 7/8	4	1 3/4	3 1/2	3/8 x 3/16 x 3 7/16	4.938 / 4.940	1 1/4 x 7/16
HSMB100	1345	10	6	5/8-11	5/8-11	1	10 1/4	6 3/4	6 1/2	5 1/4	12 5/8	21	8 3/4	2 7/8	1 7/16	18	7 1/2	22 1/4	9 1/4	8	7 1/2	15 1/8	18 11/16	18	6 3/4	29 3/8	9 3/4	11	4 1/4	1 7/8	3 3/4	1/2 x 1/4 x 3 11/16	5.438 / 5.440	1 1/4 x 7/16
HSMB120	1950	12	7	5/8-11	5/8-11	1	10 1/4	7 1/2	7 5/16	5 11/16	14 5/8	24 1/2	10 1/2	2 3/4	1 9/16	21	9	25 5/8	9 3/4	8 3/8	8	17	21 5/8	20 11/16	7	34 1/8	10 1/2	11 5/8	4 1/2	2 1/8	4 1/4	1/2 x 1/4 x 4 3/16	6.000 / 6.002	1 1/2 x 1/2
HSMB140	2785	14	7	5/8-11	5/8-11	1	10 1/4	9 1/2	7 5/16	5 11/16	16 5/8	27 1/2	11 1/2	3	1 11/16	21 3/4	9 1/4	32 5/8	10 3/4	9	8	20 11/16	28 3/8	23 15/16	7	40 1/8	11 1/2	13	5	2 1/8	4 1/4	1/2 x 1/4 x 4 3/16	6.000 / 6.002	1 1/2 x 1/2
HSMB170	4160	17	10	–	5/8-11	–	–	10 1/2	11 1/2	8	19 1/2	32	13 1/4	3 3/8	1 11/16	24	10 1/4	41 3/8	12 1/4	10 1/4	9 1/4	22 3/4	36 3/8	–	9 5/16	47	13 1/4	14 3/4	5 3/4	2 1/2	5	5/8 x 5/16 x 4 15/16	6.500 / 6.502	1 1/2 x 1/2
HSMB200	5660	20	10	–	5/8-11	–	–	11 1/2	11 1/2	8	22 1/2	36	14 3/4	3 5/8	1 15/16	27	11 1/2	43 1/4	13 1/2	10 1/2	9 1/4	26	38 1/4	–	9 5/16	54	14 1/2	16	6 1/2	2 1/2	5	5/8 x 5/16 x 4 15/16	6.500 / 6.502	1 1/2 x 1/2

All dimensions are in inches. Use certified prints for construction. The input shaft may be rotated in either direction. Standard gear sets are cut with right hand threads giving relative shaft rotations as shown above. Shaft arrangements are shown above. Desired assembly should be specified when ordering. Standard keys are furnished with units.

▲ Tolerances: 1 1/2" Diameter or Less = +.0000" -.0005"
Over 1 1/2" Diameter = +.000" -.001"

Low input speeds require special order instructions. See introductory section.

Dimensions for "Sugar Scoop" Motor Mounts for Type HSMBK

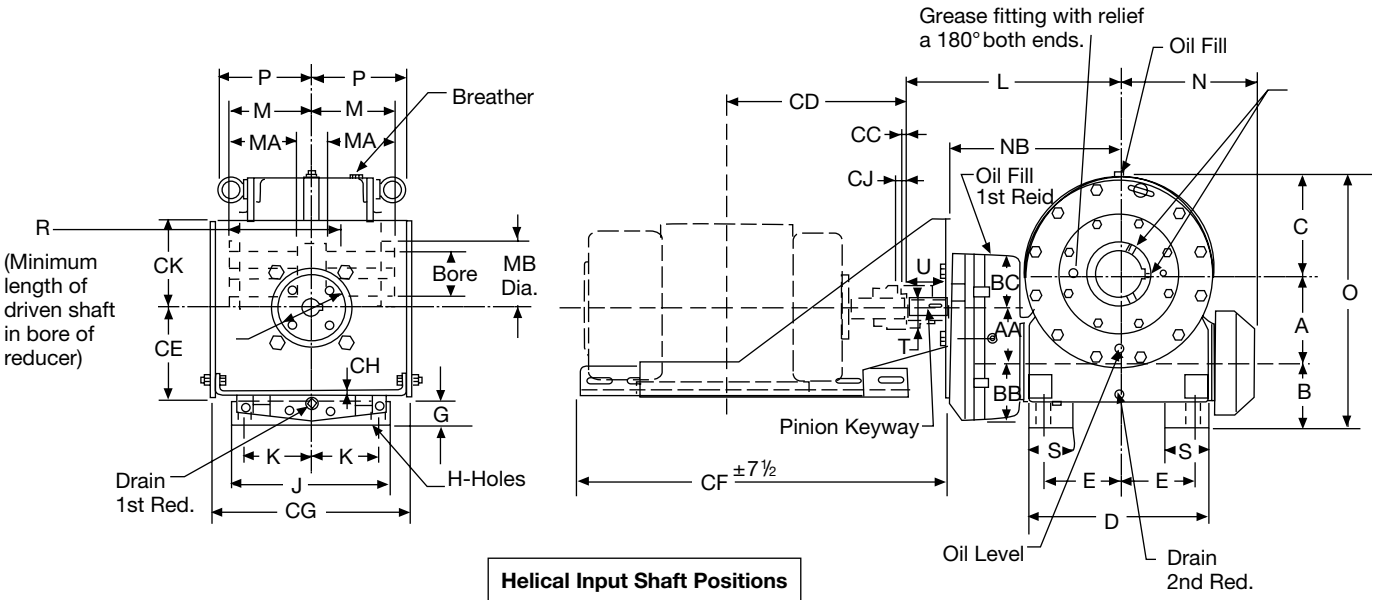

Helical Input Shaft Positions

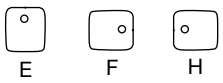

Motor Frame Size	CJ											
	35	40	50	60	70	80	90	100	120	140	170	200
143T	3/8	3/8	3/8									
145T	3/8	3/8	3/8									
182T	3/8	3/8	3/8	5/8	5/8	5/8						
184T	3/8	3/8	3/8	5/8	5/8	5/8	7/8					
213T		5/8	5/8	5/8	5/8	5/8	7/8	7/8				
215T		5/8	5/8	5/8	5/8	5/8	7/8	7/8	1 5/16			
254T				3/4	3/4	3/4	7/8	7/8	1 5/16	1 5/16	1 3/8	1 3/8
256T				3/4	3/4	3/4	7/8	7/8	1 5/16	1 5/16	1 3/8	1 3/8
284T					7/8	7/8	7/8	7/8	1 5/16	1 5/16	1 3/8	1 3/8
286T					7/8	7/8	7/8	7/8	1 5/16	1 5/16	1 3/8	1 3/8
324T						1 5/16	1 5/16	1 5/16	1 5/16	1 5/16	1 3/8	1 3/8
326T							1 5/16	1 5/16	1 5/16	1 5/16	1 3/8	1 3/8
364T								1 1/4	1 1/4	1 1/4	1 3/8	1 3/8
365T								1 1/4	1 1/4	1 1/4	1 3/8	1 3/8
404T									1 7/8	1 7/8	1 7/8	1 7/8
405T										1 7/8	1 7/8	1 7/8

Motor Frame Size	CC	CD	CE	CF ±7½	CG	CH	CK
143T	1/8	6 1/2	4 7/8	25	12 5/8	3/16	4 7/8
145T	1/8	7	4 7/8	25	12 5/8	3/16	4 7/8
182T	1/8	7 3/4	4 7/8	25	12 5/8	3/16	4 7/8
184T	1/8	8 1/4	4 7/8	25	12 5/8	3/16	4 7/8
213T	1/8	9 5/8	5 9/16	28	12 3/4	1/4	5
215T	1/8	10 3/8	5 9/16	28	12 3/4	1/4	5
254T	1/8	12 3/8	6 5/8	31	15	5/16	6 5/8
256T	1/8	13 1/4	6 5/8	31	15	5/16	6 5/8
284T	1/8	14 1/8	7 5/8	31	17	5/16	7 5/8
286T	1/8	14 7/8	7 5/8	31	17	5/16	7 5/8
324T	1/8	15 3/4	8 1/2	35 1/4	19 1/16	3/8	8 1/2
326T	1/8	16 1/2	8 1/2	35 1/4	19 1/16	3/8	8 1/2
364T	1/8	17 3/8	9 1/2	35 1/4	21 5/16	3/8	9 1/2
365T	1/8	17 7/8	9 1/2	35 1/4	21 5/16	3/8	9 1/2
404T	1/8	20	10 1/2	35 1/4	23 5/16	3/8	10 1/2
405T	1/8	20 3/4	10 1/2	35 1/4	23 5/16	3/8	10 1/2

Unit Size	A	AA	AH	B	BB	BC	BD	C	D	E	G	H	J	K	L	M	MA	MB	N	NB	O	P	R	S	T▲	U	Pinion Keyway	Bore	Bore Keyway
HSMBK-35	3 1/2	2 1/2	3/8-16	3 3/8	3 1/8	2 3/4	5 1/8	4 13/16	9 1/4	3 7/8	1 1/8	11/16	9	3 3/4	10 5/8	4 11/16	4 1/8	3 1/8	6 5/8	8 1/8	11 11/16	5	5 3/4	2 1/4	3/4	2	3/16 x 3/32 x 1 15/16	2.1885 / 2.1905	1/2 Wide x 1/4 Deep
HSMBK-40	4	3	3/8-16	4	3 1/2	2 7/8	5 1/8	5 3/8	10 3/8	4 1/4	1 1/2	13/16	10 1/2	4 3/8	11 9/16	5 5/16	4 11/16	3 1/2	7 3/4	9 1/8	13 3/8	5 1/2	6 7/16	2 1/2	7/8	2	3/16 x 3/32 x 1 15/16	2.438 / 2.440	5/8 Wide x 5/16 Deep
HSMBK-50	5	3 1/2	1/2-13	4 5/8	4	3 1/2	6 3/8	7 1/2	11 1/2	4 3/4	1 3/4	13/16	12	4 7/8	12 5/8	5 7/8	5 1/4	4 3/16	8 5/8	9 7/8	17 1/8	6 15/16	7	3	1 1/8	2 1/4	1/4 x 1/8 x 2 3/16	2.938 / 2.940	3/4 Wide x 3/8 Deep
HSMBK-60	6	4	1/2-13	5	4 3/4	3 5/8	6 3/8	8 5/8	13 1/4	5 1/4	1 1/2	15/16	13	5 1/4	14 3/4	6 1/2	5 3/4	4 3/4	10 1/16	11 3/4	19 5/8	7 3/16	7 3/4	3	1 1/4	2 1/2	1/4 x 1/8 x 2 7/16	3.438 / 3.440	7/8 Wide x 7/16 Deep
HSMBK-70	7	4 1/2	1/2-13	5 3/8	5 1/8	4	6 3/8	9 1/4	14 3/4	6	2	1 1/16	14	5 5/8	16 3/8	6 3/4	5 7/8	5 1/2	10 3/4	13 1/16	21 5/8	7 1/2	8 1/8	3 1/2	1 3/8	2 3/4	5/16 x 5/32 x 2 11/16	3.938 / 3.940	1 Wide x 1/2 Deep
HSMBK-80	8	5	1/2-13	5 3/4	5 1/2	4 3/8	7 3/16	10 1/2	16 1/2	6 3/4	2 1/4	1 3/16	14 1/2	6	18	7 1/4	6 1/4	6 1/4	11 3/4	14 7/16	24 1/4	8 1/4	8 3/4	4	1 1/2	3	3/8 x 3/16 x 2 15/16	4.438 / 4.440	1 Wide x 1/2 Deep
HSMBK-90	9	5 1/2	1/2-13	6 1/4	6 3/16	4 7/16	7 3/16	11 3/8	18 3/4	7 3/4	2 1/2	1 7/16	17 1/2	7 1/4	20 1/8	8 1/4	7 1/8	7	13 13/16	16 1/16	26 5/8	9 1/4	9 7/8	4	1 3/4	3 1/2	3/8 x 3/16 x 3 7/16	4.938 / 4.940	1 1/4 Wide x 7/16 Deep
HSMBK-100	10	6	5/8-11	6 3/4	6 1/2	5 1/4	9 3/16	12 5/8	21	8 3/4	2 7/8	1 7/16	18	7 1/2	22 1/4	9 1/4	8	7 1/2	15 1/8	18	29 3/8	9 3/4	11	4 1/4	1 7/8	3 3/4	1/2 x 1/4 x 3 11/16	5.438 / 5.440	1 1/4 Wide x 7/16 Deep
HSMBK-120	12	7	5/8-11	7 1/2	7 5/16	5 11/16	9 3/16	14 5/8	24 1/2	10 1/2	2 3/4	1 9/16	21	9	25 5/8	9 3/4	8 3/8	8	17	20 11/16	34 1/8	10 1/2	11 5/8	4 1/2	2 1/8	4 1/4	1/2 x 1/4 x 4 3/16	6.000 / 6.002	1 1/2 Wide x 1/2 Deep
HSMBK-140	14	7	5/8-11	9 1/2	7 5/16	5 11/16	9 3/16	16 5/8	27 1/2	11 1/2	3	1 11/16	21 3/4	9 1/4	32 5/8	10 3/4	9	8	20 11/16	23 15/16	40 1/8	11 1/2	13	5	2 1/8	4 1/4	1/2 x 1/4 x 4 3/16	6.000 / 6.002	1 1/2 Wide x 1/2 Deep
HSMBK-170	17	10	5/8-11	10 1/2	11 1/2	8	–	19 1/2	32	13 1/4	3 3/8	1 11/16	24	10 1/4	41 3/8	12 1/4	10 1/4	9 1/4	22 3/4	32 3/16	47	13 1/4	14 3/4	5 3/4	2 1/2	5	5/8 x 5/16 x 4 15/16	6.500 / 6.502	1 1/2 Wide x 1/2 Deep
HSMBK-200	20	10	5/8-11	11 1/2	11 1/2	8	–	22 1/2	36	14 3/4	3 5/8	1 15/16	27	11 1/2	43 1/4	13 1/2	10 1/2	9 1/4	26	34 1/16	54	14 1/2	16	6 1/2	2 1/2	5	5/8 x 5/16 x 4 15/16	6.500 / 6.502	1 1/2 Wide x 1/2 Deep

All dimensions are in inches. Use certified prints for construction. The input shaft may be rotated in either direction. Standard gear sets are cut with right hand threads giving relative shaft rotations as shown above. Shaft arrangements are shown above. Desired assembly should be specified when ordering. Standard keys are furnished with units.

▲ Tolerances: 1½" Diameter or Less = +.0000" -.0005"
Over 1½" Diameter = +.000" -.001"

Low input speeds require special order instructions. See introductory section.

Dimensions Type HSMF • Wall Mounted and Vertical

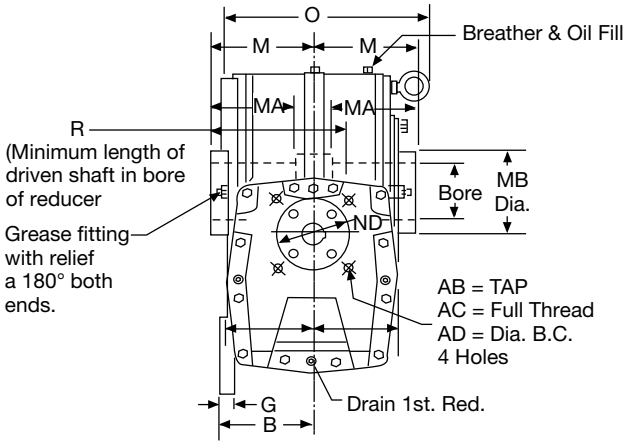

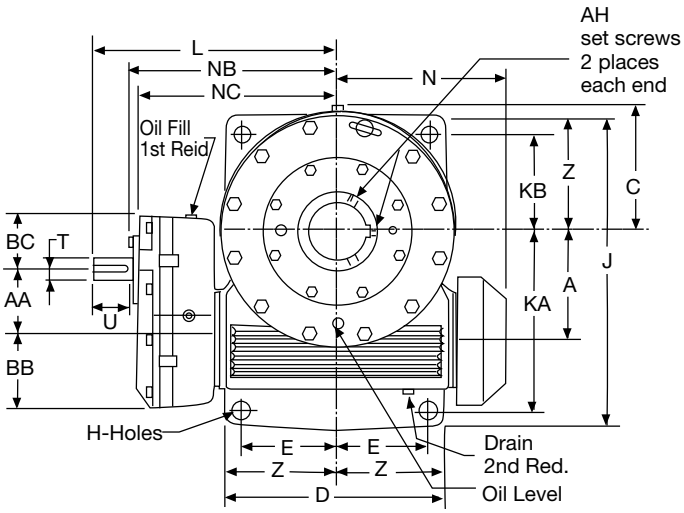

Special Note:
Unit sizes 140, 170 & 200 will be supplies with a fan mounted on input shaft. Allowance has been made in L & NB dimensions.

Wall Mounted Assemblies

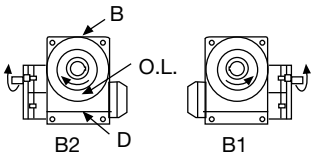

Helical Shaft Input Positions

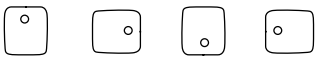

Vertical Assemblies

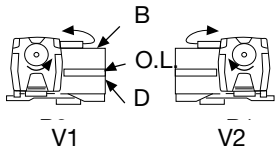

B= Breather D= Drain O.L.= Oil Level

A drywell is standard for vertical assemblies sizes 60-200 only.

Unit Size	WT. LBS.	A	AA	AB	AC	AD	AH	B	BB	BC	BD	C	D	E	G	H	J	KA	KB	L	M	MA	MB	N	NB	NC	ND	O	R	T▲	U	Keyway	Bore	K'way	Z
HSMF35	130	3 1/2	2 1/2	3/8-16	5/8	5 3/4	3/8-16	4 1/8	3 1/8	2 3/4	3 5/8	4 13/16	8 3/8	3 1/2	7/8	1 1/16	11 3/4	6 7/8	3 1/2	10 5/8	4 11/16	4 1/8	3 1/8	6 5/8	8 5/8	8 1/8	3 5/16	9 1/8	5 3/4	3/4	2	3/16 x 3/32 x 1 15/16	2.1885 / 2.1905	1/2 x 1/4	4 3/16
HSMF40	200	4	3	3/8-16	5/8	5 3/4	3/8-16	5	3 1/2	2 7/8	4	5 3/8	9 1/4	3 7/8	1 1/8	1 1/16	13 1/8	7 5/8	3 7/8	11 9/16	5 5/16	4 11/16	3 1/2	7 3/4	9 9/16	9 1/8	3 5/16	10 1/2	6 7/16	7/8	2	3/16 x 3/32 x 1 15/16	2.438 / 2.440	5/8 x 5/16	4 5/8
HSMF50	285	5	3 1/2	1/2-13	3/4	7 1/4	1/2-13	5 5/8	4	3 1/2	4 5/8	7 1/2	11 1/8	4 3/4	1 1/4	13/16	15 3/8	9	4 3/4	12 5/8	5 7/8	5 1/4	4 3/16	8 5/8	10 3/8	9 7/8	4 1/4	12 9/16	7	1 1/8	2 1/4	1/4 x 1/8 x 2 3/16	2.938 / 2.940	3/4 x 3/8	5 9/16
HSMF60	420	6	4	1/2-13	3/4	7 1/4	1/2-13	6 1/4	4 3/4	3 5/8	5 1/2	8 5/8	13 3/8	5 3/4	1 3/8	13/16	18 1/8	10 1/2	5 3/4	14 3/4	6 1/2	5 3/4	4 3/4	10 1/16	12 1/4	11 3/4	4 1/4	13 7/16	7 3/4	1 1/4	2 1/2	1/4 x 1/8 x 2 7/16	3.438 / 3.440	7/8 x 7/16	6 11/16
HSMF70	585	7	4 1/2	1/2-13	3/4	7 1/4	1/2-13	6 1/2	5 1/8	4	5 7/8	9 1/4	14 5/8	6 1/4	1 3/8	15/16	20 1/8	11 3/4	6 1/4	16 3/8	6 3/4	5 7/8	5 1/2	10 3/4	13 5/8	13 1/16	4 7/8	14	8 1/8	1 3/8	2 3/4	5/16 x 5/32 x 2 11/16	3.938 / 3.940	1 x 1/2	7 5/16
HSMFBO	710	8	5	5/8-11	1	8 1/4	1/2-13	6 5/8	5 1/2	4 3/8	6 3/8	10 1/2	16 1/2	7	1 1/2	1 1/16	22 1/4	12 3/4	7	18	7 1/4	6 1/4	6 1/4	11 3/4	15 1/16	14 7/16	5 3/4	17 7/8	8 3/4	1 1/2	3	3/8 x 3/16 x 2 15/16	4.438 / 4.440	1 x 1/2	8 1/4
HSMF90	925	9	5 1/2	5/8-11	1	8 1/4	1/2-13	7 3/4	6 3/16	4 7/16	8 1/32	11 3/8	18 1/2	7 7/8	1 5/8	1 3/16	25	14 3/8	7 7/8	20 1/8	8 1/4	7 1/8	7	13 13/16	16 11/16	16 1/16	5 3/4	17	9 7/8	1 3/4	3 1/2	3/8 x 3/16 x 3 7/16	4.938 / 4.940	1 1/4 x 7/16	9 1/4
HSMF100	1220	10	6	5/8-11	1	10 1/4	5/8-11	8 3/4	6 1/2	5 1/4	7 5/8	12 5/8	20 3/4	9	1 3/4	1 3/16	27 1/4	15 1/2	9	22 1/4	9 1/4	8	7 1/2	15 1/8	18 11/16	18	6 3/4	18 1/2	11	1 7/8	3 3/4	1/2 x 1/4 x 3 11/16	5.438 / 5.440	1 1/4 x 7/16	10 3/8
HSMF120	1800	12	7	5/8-11	1	10 1/4	5/8-11	9	7 5/16	5 11/16	8 3/4	14 5/8	24 1/4	10 3/8	2 1/8	1 5/16	32 3/8	18 1/2	10 3/8	25 5/8	9 3/4	8 3/8	8	17	21 5/8	20 11/16	7	19 1/2	11 5/8	2 1/8	4 1/4	1/2 x 1/4 x 4 3/16	6.000 / 6.002	1 1/2 x 1/2	12 1/8
HSMF140	2600	14	7	5/8-11	1	10 1/4	5/8-11	10 1/4	7 5/16	5 11/16	8 3/4	16 5/8	27 1/2	12	2 1/4	1 5/16	37 1/2	22	12	32 5/8	10 3/4	9	8	20 11/16	28 3/8	23 15/16	7	21 3/4	13	2 1/8	4 1/4	1/2 x 1/4 x 4 3/16	6.000 / 6.002	1 1/2 x 1/2	13 3/4
HSMF170	3900	17	10	–	–	–	5/8-11	11 1/2	11 1/2	8	14 3/4	19 1/2	33	14 1/2	2 1/2	1 9/16	44 3/4	26 1/4	14 1/2	41 3/8	12 1/4	10 1/4	9 1/4	22 3/4	36 3/8	–	9 5/16	24 3/4	14 3/4	2 1/2	5	5/8 x 5/16 x 4 15/16	6.500 / 6.502	1 1/2 x 1/2	16 1/2
HSMF200	5300	20	10	–	–	–	5/8-11	12 3/4	11 1/2	8	14 3/4	22 1/2	39	17	2 3/4	1 9/16	53	31	17	43 1/4	13 1/2	10 1/2	9 1/4	26	38 1/4	–	9 5/16	27 1/4	16	2 1/2	5	5/8 x 5/16 x 4 15/16	6.500 / 6.502	1 1/2 x 1/2	19 1/2

All dimensions are in inches. Use certified prints for construction. The input shaft may be rotated in either direction. Standard gear sets are cut with right hand threads giving relative shaft rotations as shown above. Shaft arrangements are shown above. Desired assembly should be specified when ordering. Standard keys are furnished with units.

▲ Tolerances: 1 1/2" Diameter or Less = +.0000" -.0005"
Over 1 1/2" Diameter = +.000" -.001"

Low input speeds require special order instructions. See introductory section.

Dimensions for "Sugar Scoop" Motor Mounts for Type HSMF

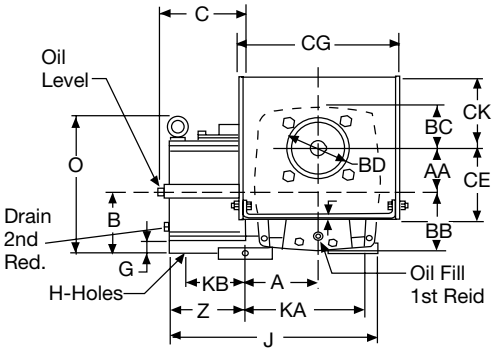

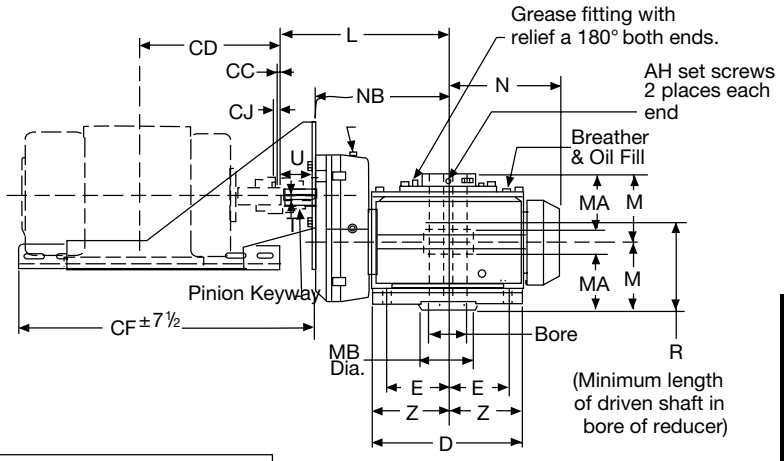

Assemblies Viewed From Top

Helical Input Shaft Positions

A drywell is standard for vertical assemblies sizes 60-200 only.

Motor Frame Size	CJ											
	35	40	50	60	70	80	90	100	120	140	170	200
143T	3/8	3/8	3/8									
145T	3/8	3/8	3/8									
182T	3/8	3/8	3/8	5/8	5/8	5/8						
184T	3/8	3/8	3/8	5/8	5/8	5/8	7/8					
213T		5/8	5/8	5/8	5/8	5/8	7/8	7/8				
215T		5/8	5/8	5/8	5/8	5/8	7/8	7/8	1 5/16			
254T				3/4	3/4	3/4	7/8	7/8	1 5/16	1 5/16	1 3/8	1 3/8
256T				3/4	3/4	3/4	7/8	7/8	1 5/16	1 5/16	1 3/8	1 3/8
284T					7/8	7/8	7/8	7/8	1 5/16	1 5/16	1 3/8	1 3/8
286T					7/8	7/8	7/8	7/8	1 5/16	1 5/16	1 3/8	1 3/8
324T						1 5/16	1 5/16	1 5/16	1 5/16	1 5/16	1 3/8	1 3/8
326T							1 5/16	1 5/16	1 5/16	1 5/16	1 3/8	1 3/8
364T								1 1/4	1 1/4	1 1/4	1 3/8	1 3/8
365T								1 1/4	1 1/4	1 1/4	1 3/8	1 3/8
404T									1 7/8	1 7/8	1 7/8	1 7/8
405T										1 7/8	1 7/8	1 7/8

Motor Frame Size	CC	CD	CE	CF ±7 1/2	CG	CH	CK
143T	1/8	6 1/2	4 7/8	25	12 5/8	3/16	4 7/8
145T	1/8	7	4 7/8	25	12 5/8	3/16	4 7/8
182T	1/8	7 3/4	4 7/8	25	12 5/8	3/16	4 7/8
184T	1/8	8 1/4	4 7/8	25	12 5/8	3/16	4 7/8
213T	1/8	9 5/8	5 9/16	28	12 3/4	1/4	5
215T	1/8	10 3/8	5 9/16	28	12 3/4	1/4	5
254T	1/8	12 3/8	6 5/8	31	15	5/16	6 5/8
256T	1/8	13 1/4	6 5/8	31	15	5/16	6 5/8
284T	1/8	14 1/8	7 5/8	31	17	5/16	7 5/8
286T	1/8	14 7/8	7 5/8	31	17	5/16	7 5/8
324T	1/8	15 3/4	8 1/2	35 1/4	19 1/16	3/8	8 1/2
326T	1/8	16 1/2	8 1/2	35 1/4	19 1/16	3/8	8 1/2
364T	1/8	17 3/8	9 1/2	35 1/4	21 5/16	3/8	9 1/2
365T	1/8	17 7/8	9 1/2	35 1/4	21 5/16	3/8	9 1/2
404T	1/8	20	10 1/2	35 1/4	23 5/16	3/8	10 1/2
405T	1/8	20 3/4	10 1/2	35 1/4	23 5/16	3/8	10 1/2

Unit Size	A	AA	AH	B	BB	BC	BD	C	D	E	G	H	J	KA	KB	L	M	MA	MB	N	NB	O	R	T▲	U	Pinion Keyway	Bore	Bore Keyway	Z
HSMFK-35	3 1/2	2 1/2	3/8-16	4 1/8	3 1/8	2 3/4	5 1/8	4 13/16	8 3/8	3 1/2	7/8	11/16	11 3/4	6 7/8	3 1/2	10 5/8	4 11/16	4 1/8	3 1/8	6 5/8	8 1/8	9 1/8	5 3/4	3/4	2	3/16 x 3/32 x 1 15/16	2.1885/2.1905	1/2 Wide x 1/4 Deep	4 3/16
HSMFK-40	4	3	3/8-16	5	3 1/2	2 7/8	5 1/8	5 3/8	9 1/4	3 7/8	1 1/8	11/16	13 1/8	7 5/8	3 7/8	11 9/16	5 5/16	4 11/16	3 1/2	7 3/4	9 1/8	10 1/2	6 7/16	7/8	2	3/16 x 3/32 x 1 15/16	2.438/2.440	5/8 Wide x 5/16 Deep	4 5/8
HSMFK-50	5	3 1/2	1/2-13	5 5/8	4	3 1/2	6 3/8	7 1/2	11 1/8	4 3/4	1 1/4	13/16	15 3/8	9	4 3/4	12 5/8	5 7/8	5 1/4	4 3/16	8 5/8	9 7/8	12 9/16	7	1 1/8	2 1/4	1/4 x 1/8 x 2 3/16	2.938/2.940	3/4 Wide x 3/8 Deep	5 9/16
HSMFK-60	6	4	1/2-13	6 1/4	4 3/4	3 5/8	6 3/8	8 5/8	13 3/8	5 3/4	1 3/8	13/16	18 1/8	10 1/2	5 3/4	14 3/4	6 1/2	5 3/4	4 3/4	10 1/16	11 3/4	13 7/16	7 3/4	1 1/4	2 1/2	1/4 x 1/8 x 2 7/16	3.438/3.440	7/8 Wide x 7/16 Deep	6 11/16
HSMFK-70	7	4 1/2	1/2-13	6 1/2	5 1/8	4	6 3/8	9 1/4	14 5/8	6 1/4	1 3/8	15/16	20 1/8	11 3/4	6 1/4	16 3/8	6 3/4	5 7/8	5 1/2	10 3/4	13 1/16	14	8 1/8	1 3/8	2 3/4	5/16 x 5/32 x 2 11/16	3.938/3.940	1 Wide x 1/2 Deep	7 5/16
HSMFK-80	8	5	1/2-13	6 5/8	5 1/2	4 3/8	7 3/16	10 1/2	16 1/2	7	1 1/2	1 1/16	22 1/4	12 3/4	7	18	7 1/4	6 1/4	6 1/4	11 3/4	14 7/16	14 7/8	8 3/4	1 1/2	3	3/8 x 3/16 x 2 15/16	4.438/4.440	1 Wide x 1/2 Deep	8 1/4
HSMFK-90	9	5 1/2	1/2-13	7 3/4	6 3/16	4 7/16	7 3/16	11 3/8	18 1/2	7 7/8	1 5/8	1 3/16	25	14 3/8	7 7/8	20 1/8	8 1/4	7 1/8	7	13 13/16	16 1/16	17	9 7/8	1 3/4	3 1/2	3/8 x 3/16 x 3 7/16	4.938/4.940	1 1/4 Wide x 7/16 Deep	9 1/4
HSMFK-100	10	6	5/8-11	8 3/4	6 1/2	5 1/4	9 3/16	12 5/8	20 3/4	9	1 3/4	1 3/16	27 1/4	15 1/2	9	22 1/4	9 1/4	8	7 1/2	15 1/8	18	18 1/2	11	1 7/8	3 3/4	1/2 x 1/4 x 3 11/16	5.438/5.440	1 1/4 Wide x 7/16 Deep	10 3/8
HSMFK-120	12	7	5/8-11	9	7 5/16	5 11/16	9 3/16	14 5/8	24 1/4	10 3/8	2 1/8	1 5/16	32 3/8	18 1/2	10 3/8	25 5/8	9 3/4	8 3/8	8	17	20 11/16	19 1/2	11 5/8	2 1/8	4 1/4	1/2 x 1/4 x 4 3/16	6.000/6.002	1 1/2 Wide x 1/2 Deep	12 1/8
HSMFK-140	14	7	5/8-11	10 1/4	7 5/16	5 11/16	9 3/16	16 5/8	27 1/2	12	2 1/4	1 5/16	37 1/2	22	12	32 5/8	10 3/4	9	8	20 11/16	23 15/16	21 3/4	13	2 1/8	4 1/4	1/2 x 1/4 x 4 3/16	6.000/6.002	1 1/2 Wide x 1/2 Deep	13 3/4
HSMFK-170	17	10	5/8-11	11 1/2	11 1/2	8	–	19 1/2	33	14 1/2	2 1/2	1 9/16	44 3/4	26 1/4	14 1/2	41 3/8	12 1/4	10 1/4	9 1/4	22 3/4	32 3/16	24 3/4	14 3/4	2 1/2	5	5/8 x 5/16 x 4 15/16	6.500/6.502	1 1/2 Wide x 1/2 Deep	16 1/2
HSMFK-200	20	10	5/8-11	12 3/4	11 1/2	8	–	22 1/2	39	17	2 3/4	1 9/16	53	31	17	43 1/4	13 1/2	10 1/2	9 1/4	26	34 1/16	27 1/4	16	2 1/2	5	5/8 x 5/16 x 4 15/16	6.500/6.502	1 1/2 Wide x 1/2 Deep	19 1/2

All dimensions are in inches. Use certified prints for construction. The input shaft may be rotated in either direction. Standard gear sets are cut with right hand threads giving relative shaft rotations as shown above. Shaft arrangements are shown above. Desired assembly should be specified when ordering. Standard keys are furnished with units.

▲ Tolerances: 1 1/2" Diameter or Less = +.0000" -.0005"
Over 1 1/2" Diameter = +.000" -.001"

Low input speeds require special order instructions. See introductory section.

Delroyd Double Worm Speed Reducers

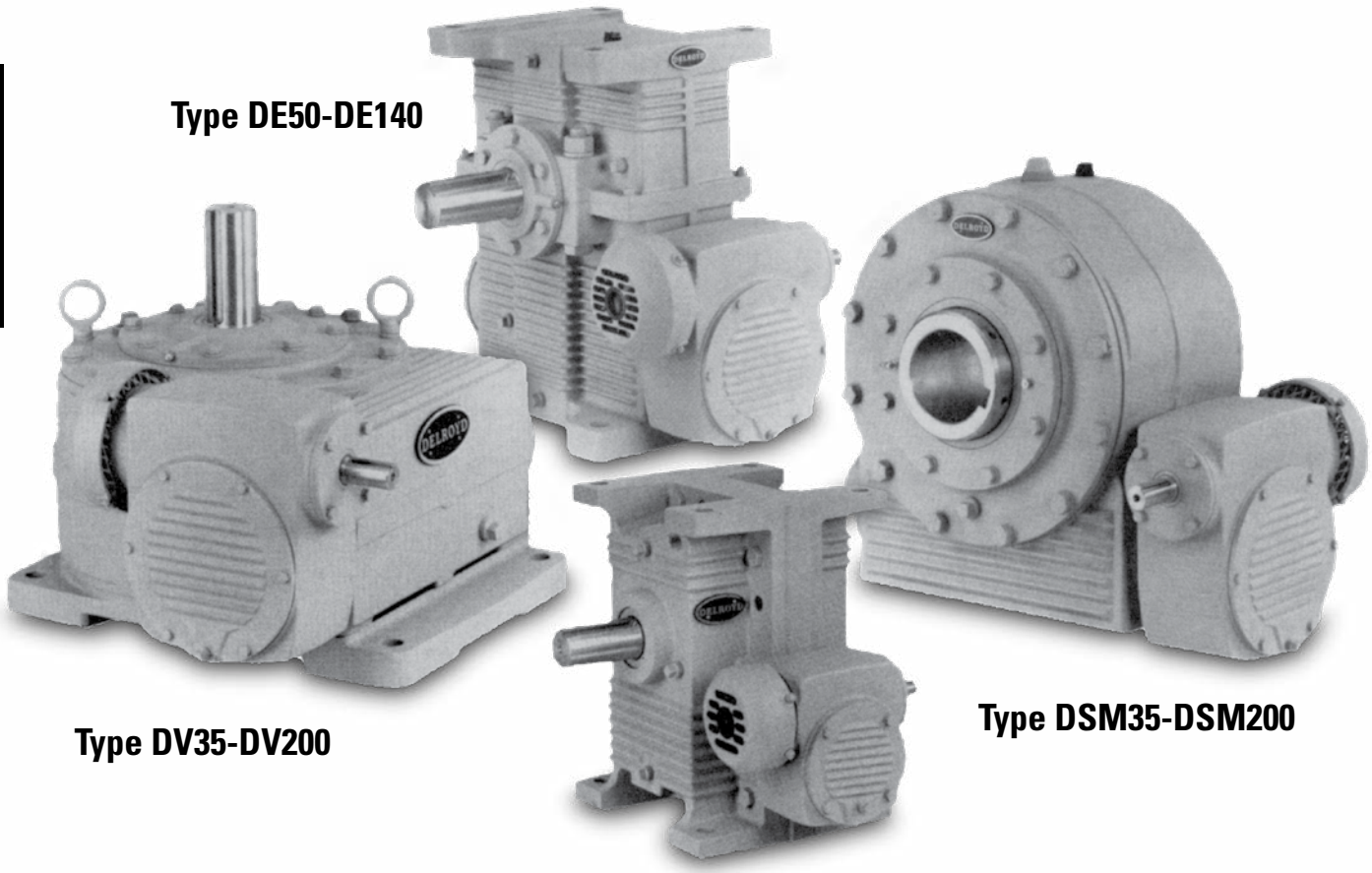

Type DE50-DE140

Type DV35-DV200

Type DSM35-DSM200

Type DE35-DE40

Horsepower and Torque Ratings • Double Worm

WORM SPEED (RPM)	Unit Size	35	40	50	60	70	80	90	100	120	140	170	200
	Center Distance	3.5	4	5	6	7	8	9	10	12	14	17	20
	Total Actual Ratio	80.1	80.1	80.1	75.8	75.8	75.8	75.8	75.8	75.2	75.6	75.6	75.6
	Ratio Combinations	5-1/6 15-1/2	5-1/6 15-1/2	5-1/6 15-1/2	5-1/6 14-2/3	5-1/6 14-2/3	5-1/6 14-2/3	5-1/6 14-2/3	5-1/6 14-2/3	5-1/8 14-2/3	5-1/8 14-3/4	5-1/8 14-3/4	5-1/8 14-3/4
1750	Mech. Input HP	2.32	2.96	4.14	7.62	10.8	14.8	21.7	23.8	34.8	34.8	71.3	92.5
	Out.Torq., in.lbs.	4810	6390	9180	16400	23600	32800	49300	53500	80000	80000	170000	224000
	Therm. Input HP	2.03	2.78	3.10	5.27	7.50	10.1	17.9	17.9	26.2	34.8	62.5	82.5
	Output RPM	21.8	21.8	21.8	23.1	23.1	23.1	23.1	23.1	23.3	23.2	23.2	23.2
	Efficiency%	71.9	74.8	76.9	78.8	80.0	81.2	83.2	82.3	84.9	84.4	87.6	88.9
1450	Mech. Input HP	1.98	2.57	3.79	6.96	10.0	13.5	19.0	21.8	31.7	31.7	65.7	85.4
	Out.Torq., in.lbs.	4860	6610	10100	18000	26100	35900	51800	59000	88500	88500	187000	246000
	Therm. Input HP	1.78	2.48	2.94	4.85	6.80	9.30	16.9	16.9	24.6	31.7	55.0	75.0
	Output RPM	18.1	18.1	18.1	19.1	19.1	19.1	19.1	19.1	19.3	19.2	19.2	19.2
	Efficiency%	70.5	73.9	76.5	78.4	79.2	80.7	82.9	82.1	85.4	85.0	86.6	87.7
1150	Mech. Input HP	1.62	2.14	3.37	5.76	8.68	12.3	16.1	19.5	28.3	28.3	59.2	77.5
	Out.Torq., in.lbs.	4980	6800	11200	18600	28200	40000	54500	66000	97500	975000	210000	278000
	Therm. Input HP	1.50	2.04	2.70	4.30	6.02	8.25	14.2	15.2	22.6	28.3	50.0	64.5
	Output RPM	14.4	14.4	14.4	15.2	15.2	15.2	15.2	15.2	15.3	15.2	15.2	15.2
	Efficiency%	69.9	72.4	75.7	77.6	78.1	78.3	81.3	81.5	83.6	83.2	85.6	86.6
865	Mech. Input HP	1.27	1.67	2.81	4.49	6.91	9.72	12.7	16.9	25.2	25.2	51.3	67.0
	Out.Torq., in.lbs.	5090	6940	12200	19200	29200	41700	57100	75400	113000	113000	238000	313000
	Therm. Input HP	1.22	1.62	2.39	3.74	5.28	7.19	11.4	13.3	20.0	23.6	41.8	52.6
	Output RPM	10.8	10.8	10.8	11.4	11.4	11.4	11.4	11.4	11.5	11.4	11.4	11.4
	Efficiency %	68.7	71.2	74.4	77.2	76.6	77.7	81.6	80.8	81.8	81.4	84.2	84.8
575	Mech. Input HP	0.887	1.16	1.96	3.14	4.88	6.89	9.43	12.0	18.5	21.0	42.9	55.5
	Out.Torq., in.lbs.	5210	7080	12600	19800	30300	43500	59900	79500	130000	140000	323000	381000
	Therm. Input HP	0.871	1.14	1.89	2.92	4.27	5.58	8.19	10.6	16.0	17.8	31.6	39.7
	Output RPM	7.18	7.18	7.18	7.59	7.59	7.59	7.59	7.59	7.65	7.61	7.61	7.61
	Efficiency%	66.9	69.6	73.0	75.8	74.9	76.0	76.5	79.4	85.1	80.4	83.0	82.8
300	Mech. Input HP	0.489	0.641	1.08	1.72	2.72	3.83	5.27	6.91	12.3	14.0	27.2	39.8
	Out.Torq., in.lbs.	5320	7240	12900	20400	31400	45300	62700	83600	138000	173000	339000	502000
	Therm. Input HP	0.476	0.620	1.04	1.67	2.67	3.74	4.67	6.87	10.6	11.6	20.6	26.0
	Output RPM	3.75	3.75	3.75	3.96	3.96	3.96	3.96	3.96	3.99	3.97	3.97	3.97
	Efficiency %	64.7	67.1	70.8	74.4	72.4	74.6	74.6	76.0	70.6	77.8	78.5	79.5

WORM SPEED (RPM)	Unit Size	35	40	50	60	70	80	90	100	120	140	170	200
	Center Distance	3.5	4	5	6	7	8	9	10	12	14	17	20
	Total Actual Ratio	93.4	93.4	93.4	94.2	94.2	94.2	94.2	94.2	95.1	95.5	95.5	95.5
	Ratio Combinations	9-2/3 9-2/3	9-2/3 9-2/3	9-2/3 9-2/3	9-2/3 9-3/4	9-2/3 9-3/4	9-2/3 9-3/4	9-2/3 9-3/4	9-2/3 9-3/4	9-3/4 9-3/4	9-3/4 9-4/5	9-3/4 9-4/5	9-3/4 9-4/5
1750	Mech. Input HP	1.74	1.74	2.88	5.39	7.64	10.1	16.6	16.6	24.0	24.0	48.7	65.1
	Out.Torq., in.lbs.	4270	4430	7160	14400	20500	27200	45800	45800	72100	72100	146000	195000
	Therm. Input HP	1.82	2.16	2.16	3.86	5.50	7.20	12.5	12.5	18.0	24.0	45.5	60.3
	Output RPM	18.7	18.7	18.7	18.6	18.6	18.6	18.6	18.6	18.4	18.3	18.3	18.3
	Efficiency%	73.0	75.7	73.9	78.8	79.1	79.4	81.3	81.3	87.7	87.4	87.2	87.1
1450	Mech. Input HP	1.56	1.56	2.61	4.91	7.11	9.37	15.4	15.4	21.9	21.9	44.7	60.2
	Out.Torq., in.lbs.	4630	4780	7950	15600	22700	30300	51300	51300	77600	77600	158000	212000
	Therm. Input HP	1.48	1.93	2.02	3.55	4.98	6.62	11.9	11.9	17.0	21.9	41.8	55.8
	Output RPM	15.5	15.5	15.5	15.4	15.4	15.4	15.4	15.4	15.2	15.2	15.2	15.2
	Efficiency%	73.1	75.4	75.0	77.6	78.0	79.0	81.0	81.0	85.7	85.4	85.2	85.2
1150	Mech. Input HP	1.33	1.34	2.27	4.33	6.42	8.46	13.3	13.9	19.8	19.8	40.1	53.5
	Out.Torq., in.lbs.	4830	5080	8640	17200	25600	34300	55200	57800	87000	87000	174000	235000
	Therm. Input HP	1.28	1.68	1.82	3.15	4.41	5.84	10.7	10.7	15.8	19.8	37.5	49.6
	Output RPM	12.3	12.3	12.3	12.2	12.2	12.2	12.2	12.2	12.1	12.0	12.0	12.0
	Efficiency%	71.0	74.1	74.4	76.9	77.2	78.5	80.3	80.6	84.3	84.0	82.9	83.9
865	Mech. Input HP	1.00	1.08	1.87	3.58	5.50	7.76	10.5	10.8	17.7	17.7	35.1	46.4
	Out.Torq., in.lbs.	4890	5340	9330	18600	28700	40900	56800	58900	102000	102000	197000	262000
	Therm. Input HP	0.986	1.32	1.59	2.72	3.84	5.10	9.35	9.35	15.1	17.7	33.1	43.3
	Output RPM	9.26	9.26	9.26	9.18	9.18	9.18	9.18	9.18	9.10	9.05	9.05	9.05
	Efficiency %	71.7	72.6	73.3	75.9	75.9	76.8	78.8	79.5	83.2	82.8	80.7	81.2
575	Mech. Input HP	0.694	0.778	1.36	2.47	3.80	5.46	7.47	9.70	14.2	14.2	29.1	39.1
	Out.Torq., in.lbs.	4960	5650	9980	19000	29300	41900	58300	77600	120000	120000	246000	330000
	Therm. Input HP	0.674	0.897	1.22	2.16	3.07	3.96	7.15	7.45	12.2	13.5	25.4	32.6
	Output RPM	6.15	6.15	6.15	6.10	6.10	6.10	6.10	6.10	6.05	6.02	6.02	6.02
	Efficiency%	69.7	71.0	71.7	74.6	74.6	74.4	75.6	77.4	81.1	80.7	80.8	80.6
300	Mech. Input HP	0.380	0.440	0.781	1.34	2.10	3.01	4.05	5.35	8.79	9.00	19.2	26.4
	Out.Torq., in.lbs.	5020	5940	10700	19300	29900	42900	59900	80000	132000	136000	290000	398000
	Therm. Input HP	0.365	0.483	0.781	1.28	2.00	2.88	3.88	5.15	8.42	8.75	16.6	21.4
	Output RPM	3.21	3.21	3.21	3.18	3.18	3.18	3.18	3.18	3.16	3.14	3.14	3.14
	Efficiency %	67.2	68.8	69.8	72.6	72.0	72.1	74.6	75.6	75.5	75.3	75.3	75.1

Horsepower and Torque Ratings • Double Worm

WORM SPEED (RPM)	Unit Size / Center Distance	35 / 3.5	40 / 4	50 / 5	60 / 6	70 / 7	80 / 8	90 / 9	100 / 10	120 / 12	140 / 14	170 / 17	200 / 20
	Total Actual Ratio	**105.9**	**105.9**	**105.9**	**105.9**	**105.9**	**105.9**	**105.9**	**105.9**	**105.1**	**100.8**	**100.8**	**100.8**
	Ratio Combinations	5-1/6 20-1/2	5-1/6 20-1/2	5-1/6 20-1/2	5-1/6 20-1/2	5-1/6 20-1/2	5-1/6 20-1/2	5-1/6 20-1/2	5-1/6 20-1/2	5-1/8 20-1/2	5-1/8 19-2/3	5-1/8 19-2/3	5-1/8 19-2/3
1750	Mech. Input HP	1.81	2.32	4.07	6.45	9.63	13.3	17.9	23.8	34.8	34.8	71.3	92.5
	Out.Torq., in.lbs.	4760	6350	11400	18400	28000	39400	54000	71000	107000	107000	219000	284000
	Therm. Input HP	1.72	2.26	3.10	5.27	7.50	10.1	14.8	17.9	26.2	34.8	53.0	78.0
	Output RPM	16.5	16.5	16.5	16.5	16.5	16.5	16.5	16.5	16.7	17.4	17.4	17.4
	Efficiency%	69.0	71.6	73.1	74.8	76.2	77.7	79.1	78.2	81.2	84.7	84.6	84.6
1450	Mech. Input HP	1.54	2.00	3.50	5.58	8.36	11.4	15.5	21.1	31.7	31.7	65.7	85.4
	Out.Torq., in.lbs.	4830	6490	11800	19000	28900	40600	56000	75500	116000	116000	241000	313000
	Therm. Input HP	1.25	1.99	2.94	4.85	6.80	9.30	13.5	16.6	24.6	31.7	48.0	70.0
	Output RPM	13.7	13.7	13.7	13.7	13.7	13.7	13.7	13.7	13.8	14.4	14.4	14.4
	Efficiency%	68.1	70.4	73.0	74.2	75.1	77.4	78.5	77.7	80.1	83.5	83.7	83.6
1150	Mech. Input HP	1.29	1.67	2.90	4.65	6.95	9.66	13.1	17.7	27.2	28.3	59.2	77.5
	Out.Torq., in.lbs.	4930	6640	12100	19700	30000	42400	58300	29500	124000	129000	269000	352000
	Therm. Input HP	1.25	1.65	2.7	4.30	6.02	8.25	11.5	14.2	22.6	28.3	43.0	63.0
	Output RPM	10.9	10.9	10.9	10.9	10.9	10.9	10.9	10.9	10.9	11.4	11.4	11.4
	Efficiency%	65.9	68.4	71.8	73.0	74.4	75.6	76.7	77.4	79.1	82.5	82.2	82.2
865	Mech. Input HP	0.993	1.32	2.30	3.55	5.56	7.67	10.7	14.3	21.9	25.2	49.1	67.0
	Out.Torq., in.lbs.	5010	6790	12400	20400	31200	44300	61000	83500	131000	151000	294000	400000
	Therm. Input HP	0.977	1.30	2.28	3.56	5.28	7.19	9.68	12.0	18.9	23.6	38.0	52.6
	Output RPM	8.17	8.17	8.17	8.17	8.17	8.17	8.17	8.17	8.23	8.58	8.58	8.58
	Efficiency %	65.4	66.8	70.1	74.3	72.7	74.9	73.9	75.7	78.1	81.4	81.6	81.3
575	Mech. Input HP	0.687	0.919	1.60	2.59	3.97	5.44	7.55	10.0	15.8	21.0	36.5	53.9
	Out.Torq., in.lbs.	5060	6930	12800	21000	32600	46100	63500	85000	138000	184000	320000	472000
	Therm. Input HP	0.681	0.905	1.59	2.59	3.88	5.32	7.32	9.45	14.5	17.8	31 .6	39.7
	Output RPM	5.43	5.43	5.43	5.43	5.43	5.43	5.43	5.43	5.47	5.70	5.70	5.70
	Efficiency%	63.4	65.0	68.8	69.9	70.5	73.1	72.5	73.2	75.8	79.3	79.4	79.2
300	Mech. Input HP	0.381	0.511	0.888	1.45	2.17	3.06	4.34	5.63	8.40	14.0	20.7	30.7
	Out.Torq., in.lbs.	5160	7080	13100	21700	33100	48100	66600	88600	141000	235000	346000	516000
	Therm. Input HP	0.372	0.495	0.86	1.41	2.16	2.96	4.27	5.62	8.28	11.5	19 .2	26.0
	Output RPM	2.83	2.83	2.83	2.83	2.83	2.83	2.83	2.83	2.86	2.98	2.98	2.98
	Efficiency %	60.9	62.3	66.4	67.3	68.3	70.5	69.0	70.7	76.0	79.2	79.2	79.2

WORM SPEED (RPM)	Unit Size / Center Distance	35 / 3.5	40 / 4	50 / 5	60 / 6	70 / 7	80 / 8	90 / 9	100 / 10	120 / 12	140 / 14	170 / 17	200 / 20
	Total Actual Ratio	**126.6**	**126.6**	**126.6**	**126.6**	**126.6**	**126.6**	**126.6**	**126.6**	**125.5**	**125.5**	**125.5**	**125.5**
	Ratio Combinations	5-1/6 24-1/2	5-1/6 24-1/2	5-1/6 24-1/2	5-1/6 24-1/2	5-1/6 24-1/2	5-1/6 24-1/2	5-1/6 24-1/2	5-1/6 24-1/2	5-1/8 24-1/2	5-1/8 24-1/2	5-1/8 24-1/2	5-1/8 24-1/2
1750	Mech. Input HP	1.58	1.96	3.46	5.43	8.16	11.4	15.4	19.3	31.4	34.8	62.9	88.3
	Out.Torq., in.lbs.	4740	6180	11300	18200	27800	39400	53600	68000	112000	128000	231000	324000
	Therm. Input HP	1.57	1.96	3.10	5.27	7.50	10.1	13.3	16.3	26.2	34.8	48.0	65.0
	Output RPM	13.8	13.8	138	13.8	13.8	13.8	13.8	13.8	13.9	13.9	13.9	13.9
	Efficiency%	65.8	69.0	71.4	73.5	74.7	75.8	76.3	77.3	78.9	81.4	81.3	81.3
1450	Mech. Input HP	1.36	1.69	2.99	4.70	7.12	9.75	13.5	17.7	27.9	31.7	59.3	84.0
	Out.Torq., in.lbs.	4820	6310	11600	18700	28800	40600	55600	74000	125000	135000	252000	357000
	Therm. Input HP	1.35	1.66	2.94	4.70	6.80	9.30	12.0	14.8	24.0	31.7	43.0	60.0
	Output RPM	11.4	11.4	11.4	11.4	11.4	11.4	11.4	11.4	11.5	11.5	11.5	11.5
	Efficiency%	64.7	68.0	70.3	72.3	73.5	74.1	74.8	76.0	78.2	78.1	77.9	77.8
1150	Mech. Input HP	1.12	1.39	2.49	3.92	5.94	8.17	11.3	15.0	23.6	28.3	52.0	74.1
	Out.Torq., in.lbs.	4940	6450	11900	19300	29800	42000	58000	77500	125000	150000	275000	393000
	Therm. Input HP	1.11	1.39	2.47	3.89	5.80	7.94	10.2	12.6	20.4	28.3	38.0	55.0
	Output RPM	9.08	9.08	9.08	9.08	9.08	9.08	9.08	9.08	9.16	9.16	9.16	9.16
	Efficiency%	63.6	66.7	68.9	70.8	72.3	74.1	74.0	74.5	77.0	77.1	77.0	77.0
865	Mech. Input HP	0.874	1.10	1.95	3.11	4.65	6.53	9.06	12.1	19.5	25.2	43.8	62.9
	Out.Torq., in.lbs.	5030	6580	12200	19800	30400	43700	60400	81500	133000	172000	299000	430000
	Therm. Input HP	0.868	1.09	1.96	3.07	4.60	6.42	8.42	10.6	17.6	25.2	33.0	51.0
	Output RPM	6.83	6.83	6.83	6.83	6.83	6.83	6.83	6.83	6.89	6.89	6.89	6.89
	Efficiency %	62.4	65.1	67.9	69.2	70.9	72.6	72.3	73.0	74.6	74.6	74.7	74.7
575	Mech. Input HP	0.614	0.764	1.37	2.18	3.29	4.65	6.50	8.61	14.0	19.8	32.6	47.2
	Out.Torq., in.lbs.	5140	6720	12500	20500	31600	45500	62800	85000	140000	197000	325000	471000
	Therm. Input HP	0.609	0.757	1.37	2.16	3.24	4.58	6.29	8.07	13.3	19.6	30.0	45.0
	Output RPM	4.54	4.54	4.54	4.54	4.54	4.54	4.54	4.54	4.58	4.58	4.58	4.58
	Efficiency%	60.4	63.4	65.8	67.7	69.2	70.5	69.6	71.1	72.7	72.3	72.5	72.5
300	Mech. Input HP	0.341	0.421	0.762	1.21	1.84	2.61	3.69	4.79	7.70	11.4	19.2	27.8
	Out.Torq., in.lbs.	5240	6850	12800	21100	32500	46700	64800	86300	142000	210000	352000	514000
	Therm. Input HP	0.334	0.411	0.748	1.18	1.81	2.57	3.63	4.77	7.70	10.7	17.9	26.0
	Output RPM	2.37	2.37	2.37	2.37	2.37	2.37	2.37	2.37	2.39	2.39	2.39	2.39
	Efficiency %	57.8	61.2	63.3	65.0	66.3	67.3	66.0	67.7	69.9	70.2	69.7	70.0

Ratings based on 1.0 service factor. For A.G.M.A. recommended practice on service factors, see page 11.

Horsepower and Torque Ratings • Double Worm

WORM SPEED (RPM)	Unit Size	35	40	50	60	70	80	90	100	120	140	170	200
	Center Distance	3.5	4	5	6	7	8	9	10	12	14	17	20
	Total Actual Ratio	**149.8**	**149.8**	**149.8**	**141.8**	**141.8**	**141.8**	**141.8**	**141.8**	**143.0**	**143.8**	**143.8**	**143.8**
	Ratio Combinations	9-2/3 15-1/2	9-2/3 15-1/2	9-2/3 15-1/2	9-2/3 14-2/3	9-2/3 14-2/3	9-2/3 14-2/3	9-2/3 14-2/3	9-2/3 14-2/3	9-3/4 14-2/3	9-3/4 14-3/4	9-3/4 14-3/4	9-3/4 14-3/4
1750	Mech. Input HP	1.44	1.74	2.88	4.93	7.60	10.3	13.9	16.6	24.0	24.0	48.7	65.1
	Out.Torq., in.lbs.	5060	6570	11400	19000	29200	41200	56500	66900	99200	99300	202000	270000
	Therm. Input HP	1.33	1.78	2.16	3.86	5.50	7.20	12.3	12.5	18.0	24.0	45.5	60.3
	Output RPM	11.7	11.7	11.7	12.3	12.3	12.3	12.3	12.3	12.2	12.2	12.2	12.2
	Efficiency%	65.1	70.0	73.4	75.5	75.2	78.3	79.5	78.9	80.3	79.9	80.1	80.1
1450	Mech. Input HP	1.19	1.56	2.57	4.21	6.47	9.03	11.9	15.4	21.9	21.9	44.7	60.2
	Out.Torq., in.lbs.	5130	6860	12300	19300	29800	42500	58000	74000	108000	108000	222000	299000
	Therm. Input HP	1.14	1.52	2.02	3.55	4.98	6.62	10.6	11.9	17.0	21.9	41.8	55.8
	Output RPM	9.68	9.68	9.68	10.2	10. 2	10.2	10.2	10.2	10.1	10.1	10.1	10.1
	Efficiency%	66.1	68.5	73.5	74.5	74.7	76.4	78.9	78.0	79.3	78.9	79.5	79.5
1150	Mech. Input HP	0.972	1.27	2.11	3.43	5.32	7.43	9.76	13.2	19.8	19.8	40.1	53.5
	Out.Torq., in.lbs.	5190	7060	12500	19700	30500	43600	59500	78900	123000	123000	250000	333000
	Therm. Input HP	0.950	1.25	1.82	3.15	4.41	5.84	8.73	10.7	15.9	19.8	37.5	49.6
	Output RPM	7.67	7.67	7.67	8.11	8.11	8.11	8.11	8.11	8.04	8.00	8.00	8.00
	Efficiency%	65.0	67.7	72.0	73.8	73.8	75.5	78.5	77.0	79.3	78.8	79.1	79.0
865	Mech. Input HP	0.755	0.987	1.65	2.67	4.13	5.78	7.65	10.5	16.4	17.7	35.1	46.4
	Out.Torq., in.lbs.	5250	7150	12700	20000	30800	44200	61000	81200	133000	143000	284000	376000
	Therm. Input HP	0.745	0.967	1.59	2.64	3.84	5.10	6.95	9.35	15.1	17.7	33.1	43.3
	Output RPM	5.77	5.77	5.77	6.10	6.10	6.10	6.10	6.10	6.05	6.01	6.01	6.01
	Efficiency %	70.5	66.3	63.7	72.6	72.2	74.0	77.3	74.6	77.6	77.1	77.2	77.3
575	Mech. Input HP	0.524	0.683	1.14	1.85	2.88	4.04	5.35	7.43	11.6	17.1	28.6	39.1
	Out.Torq., in.lbs.	5320	7240	12900	20400	31400	45200	62600	83500	138000	168000	339000	464000
	Therm. Input HP	0.511	0.661	1.10	1.80	2.83	3.95	4.74	7.40	11.4	13.5	25.4	32.6
	Output RPM	3.84	3.84	3.84	4.06	4.06	4.06	4.06	4.06	4.02	4.00	4.00	4.00
	Efficiency%	61.7	64.5	68.7	70.8	70.0	72.0	75.3	72.3	75.6	75.1	75.2	75.3
300	Mech. Input HP	0.305	0.371	0.624	1.00	1.60	2.23	2.94	4.18	6.60	9.00	16.2	26.4
	Out.Torq., in.lbs.	5380	7320	13000	20700	32000	46200	64200	85800	142000	193000	354000	585000
	Therm. Input HP	0.279	0.355	0.593	0.957	1.54	2.13	2.54	4.05	6.27	8.75	14.1	21.3
	Output RPM	2.00	2.00	2.00	2.12	2.12	2.12	2.12	2.12	2.10	2.09	2.09	2.09
	Efficiency %	56.0	62.7	66.4	69.4	67.1	69.7	73.4	69.0	71.7	71.1	72.5	73.4

WORM SPEED (RPM)	Unit Size	35	40	50	60	70	80	90	100	120	140	170	200
	Center Distance	3.5	4	5	6	7	8	9	10	12	14	17	20
	Total Actual Ratio	**155.0**	**155.0**	**152.4**	**152.4**	**152.4**	**152.4**	**152.4**	**152.4**	**151.2**	**151.2**	**151.2**	**151.2**
	Ratio Combinations	5-1/6 30	5-1/6 30	5-1/6 29-1/2	5-1/6 29-1/2	5-1/6 29-1/2	5-1/6 29-1/2	5-1/6 29-1/2	5-1/6 29-1/2	5-1/8 29-1/2	5-1/8 29-1/2	5-1/8 29-1/2	5-1/8 29-1/2
1750	Mech. Input HP	1.46	1.87	3.10	4.69	6.65	9.41	12.6	17.1	26.2	34.1	53.3	75.3
	Out.Torq., in.lbs.	4920	6640	11500	18300	26800	38400	52400	71000	111000	148000	232000	327000
	Therm. Input HP	1.46	1.87	2.99	4.69	6.65	9.09	11.2	13.3	26.2	33.0	40.0	60.0
	Output RPM	11.3	11.3	11.5	11.5	11.5	11.5	11.5	11.5	11.6	11.6	11.6	11.6
	Efficiency%	60.6	63.5	67.6	71.1	73.4	74.4	75.8	75.6	77.8	80.0	79.8	79.8
1450	Mech. Input HP	1.26	1.61	2.60	4.05	5.84	8.20	10.9	14.6	23.2	31.5	49.8	71.3
	Out.Torq., in.lbs.	5050	6800	11700	19000	27600	39600	54000	73000	117000	159000	252000	360000
	Therm. Input HP	1.25	1.61	2.58	4.05	5.84	8.20	10.3	12.1	23.2	30.0	37.0	55.0
	Output RPM	9.35	9.35	9.51	9.51	9.51	9.51	9.51	9.51	9.59	9.59	9.59	9.59
	Efficiency%	59.5	62.7	67.9	70.8	71.4	72.9	74.8	75.5	76.7	76.8	77.0	76.9
1150	Mech. Input HP	1.04	1.33	2.14	3.32	4.83	7.05	9.20	12.3	19.4	27.1	43.4	62.6
	Out.Torq., in.lbs.	5190	6970	12000	19600	28400	41000	56000	76000	122000	171000	274000	396000
	Therm. Input HP	1.04	1.32	2.14	3.32	4.83	7.05	8.57	10.4	19.4	26.5	33.0	50.0
	Output RPM	7.42	7.42	7.54	7.54	7.54	7.54	7.54	7.54	7.61	7.61	7.61	7.61
	Efficiency%	58.8	61.6	67.1	70.7	70.4	69.6	72.9	74.0	75.9	76.1	76.2	76.4
865	Mech. Input HP	0.822	1.05	1.69	2.62	3.86	5.43	7.34	9.85	16.0	22.6	37.0	54.0
	Out.Torq., in.lbs.	5300	7130	12300	20100	29400	42400	58000	79000	129000	182000	297000	434000
	Therm. Input HP	0.815	1.04	1.69	2.62	3.86	5.43	7.03	8.75	16.0	22.1	30.0	45.0
	Output RPM	5.58	5.58	5.68	5.68	5.68	5.68	5.68	5.68	5.72	5.72	5.72	5.72
	Efficiency %	57.1	60.3	65.5	69.1	68.6	70.3	71.2	72.2	73.2	73.1	73.0	73.0
575	Mech. Input HP	0.574	0.735	1.17	1.84	2.72	3.87	5.31	7.05	11.4	16.5	27.3	40.3
	Out.Torq., in.lbs.	5380	7300	12500	20700	30400	43800	60800	82000	135000	195000	323000	476000
	Therm. Input HP	0.57	0.725	1.17	1.84	2.72	3.87	5.17	7.05	11.4	16.0	25.0	40.0
	Output RPM	3.71	3.71	3.77	3.77	3.77	3.77	3.77	3.77	3.80	3.80	3.80	3.80
	Efficiency%	55.2	58.4	64.0	67.4	66.9	67.8	68.5	69.6	71.4	71.3	71.2	71.3
300	Mech. Input HP	0.322	0.410	0.648	1.04	1.50	2.08	2.96	3.91	6.32	9.59	16.0	23.9
	Out.Torq., in.lbs.	5500	7460	12800	21300	30900	44200	61400	83000	137000	208000	349000	520000
	Therm. Input HP	0.314	0.398	0.636	1.01	1.49	2.08	2.96	3.91	6.32	8.80	15.0	22.3
	Output RPM	1.94	1.94	1.97	1.97	1.97	1.97	1.97	1.97	1.98	1.98	1.98	1.98
	Efficiency %	52.5	55.9	61.9	64.3	64.1	66.4	64.8	66.3	68.2	68.3	68.4	68.3

Horsepower and Torque Ratings • Double Worm

WORM SPEED (RPM)	Unit Size	35	40	50	60	70	80	90	100	120	140	170	200
	Center Distance	3.5	4	5	6	7	8	9	10	12	14	17	20
	Total Actual Ratio	198.2	198.2	198.2	198.2	198.2	198.2	198.2	198.2	199.9	191.8	191.8	191.8
	Ratio Combinations	9-2/3 20-1/2	9-2/3 20-1/2	9-2/3 20-1/2	9-2/3 20-1/2	9-2/3 20-1/2	9-2/3 20-1/2	9-2/3 20-1/2	9-2/3 20-1/2	9-3/4 20-1/2	9-3/4 19-2/3	9-3/4 19-2/3	9-3/4 19-2/3
1750	Mech. Input HP	1.10	1.42	2.52	4.02	6.05	8.34	11.5	15.5	23.2	24.0	48.7	65.1
	Out.Torq., in.lbs.	4930	6750	12400	20200	30800	43700	60400	82500	129000	133000	270000	360000
	Therm. Input HP	1.09	1.41	2.16	3.86	5.50	7.20	10.3	12.5	18.0	24.0	40.0	58.0
	Output RPM	8.83	8.83	8.83	8.83	8.83	8.83	8.83	8.83	8.76	9.13	9.13	9.13
	Efficiency%	63.0	66.4	68.6	70.4	71.3	73.4	73.6	74.6	77.2	80.2	80.3	80.5
1450	Mech. Input HP	0.942	1.21	2. 14	3.42	5.17	7.13	9.89	13.3	20.0	21.9	44.7	60.2
	Out.Torq., in.lbs.	4990	6830	12500	20600	31600	44800	62000	84500	133000	146000	298000	402000
	Therm. Input HP	0.935	1.20	2.02	3.42	4.98	6.62	9.35	11.1	17.0	21.9	37.0	55.0
	Output RPM	7.32	7.32	7.32	7.32	7.32	7.32	7.32	7.32	7.25	7.56	7.56	7.56
	Efficiency%	61.4	65.8	67.9	69.9	71.0	72.9	72.8	73.8	76.5	80.0	80.0	80.1
1150	Mech. Input HP	0.750	0.981	1.73	2.78	4.31	5.98	8.18	11.0	16.6	19.8	38.5	53.5
	Out.Torq., in.lbs.	5040	6920	12700	20900	32400	45900	63600	87000	137000	163000	317000	440000
	Therm. Input HP	0.743	0.964	1.71	2.77	4.17	5.97	8.18	9.86	15.8	19.8	33.0	50.0
	Output RPM	5.80	5.80	5.80	5.80	5.80	5.80	5.80	5.80	5.75	6.00	6.00	6.00
	Efficiency%	62.0	64.9	67.8	69.5	69.2	70.6	71.6	72.8	75.3	78.3	78.3	78.2
865	Mech. Input HP	0.580	0.758	1.34	2.17	3.34	4.68	4.50	8.57	13.0	17.7	30.2	45.7
	Out.Torq., in.lbs.	5100	7000	12900	21300	32800	46900	65500	88400	139000	190000	331000	490000
	Therm. Input HP	0.573	0.743	1.32	2.15	3.34	4.63	6.48	8.57	13.0	17.7	30.0	44.7
	Output RPM	4.36	4.36	4.36	4.36	4.36	4.36	4.36	4.36	4.33	4.51	4.51	4.51
	Efficiency %	60.9	63.9	66.6	68.0	68.0	69.4	70.0	71.4	73.4	76.8	78.6	76.8
575	Mech. Input HP	0.402	0.521	0.920	1.51	2.30	3.29	4.50	5.87	9.00	12.8	22.2	33.0
	Out.Torq., in.lbs.	5160	6250	13100	21700	33100	48000	66500	88400	141000	207000	346000	516000
	Therm. Input HP	0.393	0.505	0.892	1.47	2.28	3.18	4.43	5.87	8.88	12.3	20.6	30.7
	Output RPM	2.90	2.90	2.90	2.90	2.90	2.90	2.90	2.90	2.88	3.00	3.00	3.00
	Efficiency%	59.0	62.5	65.5	66.1	66.2	67.2	68.1	69.3	71.4	76.8	74.4	74.4
300	Mech. Input HP	0.224	0.286	0.507	0.830	1.26	1.84	2.55	3.30	5.09	7.49	12.7	19.6
	Out.Torq., in.lbs.	5210	7160	13300	22000	33700	49100	68200	90900	145000	214000	361000	540000
	Therm. Input HP	0.217	0.274	0.485	0.795	1.23	1.74	2.45	3.21	4.87	6.76	11.3	17.4
	Output RPM	1.51	1.51	1.51	1.51	1.51	1.51	1.51	1.51	1.50	1.56	1.56	1.56
	Efficiency %	55.8	60.1	62.9	63.7	64.0	64.0	64.2	66.1	68.0	70.9	70.7	68.5

WORM SPEED (RPM)	Unit Size	35	40	50	60	70	80	90	100	120	140	170	200
	Center Distance	3.5	4	5	6	7	8	9	10	12	14	17	20
	Total Actual Ratio	236.8	236.8	236.8	236.8	236.8	236.8	236.8	236.8	238.9	238.9	238.9	238.9
	Ratio Combinations	9-2/3 24-1/2	9-2/3 24-1/2	9-2/3 24-1/2	9-2/3 24-1/2	9-2/3 24-1/2	9-2/3 24-1/2	9-2/3 24-1/2	9-2/3 24-1/2	9-3/4 24-1/2	9-3/4 24-1/2	9-3/4 24-1/2	9-3/4 24-1/2
1750	Mech. Input HP	0.984	1.20	2.13	3.38	5.06	7.19	9.76	12.9	20.3	24.0	45.8	65.1
	Out.Torq., in.lbs.	5000	6550	12100	19700	30000	43400	59600	80500	131000	155000	296000	421000
	Therm. Input HP	0.983	1.20	2.13	3.38	5.06	6.97	9.13	11.2	18.0	24.0	35.0	53.0
	Output RPM	7.39	7.39	7.39	7.39	7.39	7.39	7.39	7.39	7.33	7.33	7.33	7.33
	Efficiency%	59.6	63.7	66.6	68.3	69.5	70.8	71.6	73.2	75.0	75.1	75.1	75.2
1450	Mech. Input HP	0.832	1.01	1.77	2.87	4.32	6.10	8.48	11.1	17.6	21.9	40.3	58.7
	Out.Torq., in.lbs.	5060	6620	12300	20000	30600	44200	61200	82500	135000	168000	309000	450000
	Therm. Input HP	0.830	0.996	1.77	2.86	4.32	5.88	8.00	9.66	15.6	21.9	33.0	50.0
	Output RPM	6.12	6.12	6.12	6.12	6.12	6.12	6.12	6.12	6.07	6.07	6.07	6.07
	Efficiency%	59.1	63.9	67.5	67.9	68.8	70.4	70.1	72.2	73.9	73,9	73.2	73.8
1150	Mech. Input HP	0.678	0.826	1.45	2.35	3.59	5.07	6.98	9.20	14.5	19.8	33.7	49.2
	Out.Torq., in.lbs.	5120	6700	12500	20400	31400	45300	62600	84500	139000	190000	323000	470000
	Therm. Input HP	0.675	0.820	1.45	2.34	3.59	5.07	6.68	8.48	14.0	19.8	30.0	47.0
	Output RPM	4.86	4.86	4.86	4.86	4.86	4.86	4.86	4.86	4.81	4.81	4.81	4.81
	Efficiency%	58.2	62.5	66.4	66.9	67.4	68.8	69.1	70.8	73.2	73.4	73.2	73.0
865	Mech. Input HP	0.505	0.613	1.09	1.75	2.67	3.79	5.24	6.87	11.1	15.9	26.4	38.5
	Out.Torq., in.lbs.	5180	6770	12600	20700	31900	46000	63700	85900	142000	203000	337000	490000
	Therm. Input HP	0.500	0.606	1.09	1.72	2.67	3.79	5.24	6.87	11.1	15.5	25.8	37.7
	Output RPM	3.65	3.65	3.65	3.65	3.65	3.65	3.65	3.65	3.62	3.62	3.62	3.62
	Efficiency %	59.5	64.0	67.0	68.7	69.2	70.4	70.5	72.5	73.5	73.4	73.3	73.1
575	Mech. Input HP	0.367	.440	0.788	1.26	1.94	2.74	3.80	4.89	7.81	11.6	17.8	25.9
	Out.Torq., in.lbs.	5240	6850	12800	21100	32400	46600	64700	86200	142000	210000	352000	514000
	Therm. Input HP	0.359	0.430	0.775	1.22	1.91	2.70	3.74	4.87	7.80	10.9	16.6	24.2
	Output RPM	2.43	2.43	2.43	2.43	2.43	2.43	2.43	2.43	2.41	2.41	2.41	2.41
	Efficiency%	55.0	59.9	62.6	64.4	64.4	65.6	65.6	68.0	69.5	69.4	75.7	75.8
300	Mech. Input HP	0.204	0.242	0.433	0.692	1.08	1.51	2.12	2.76	4.40	6.54	11.0	16.1
	Out.Torq., in.lbs.	5300	6920	13000	21400	33000	47600	66300	88500	146000	218000	367000	538000
	Therm. Input HP	0.198	0.234	0.420	0.660	1.04	1.46	2.04	2.68	4.26	5.95	9.90	14.4
	Output RPM	1.27	1.27	1.27	1.27	1.27	1.27	1.27	1.27	1.26	1.26	1.26	1.26
	Efficiency %	52.1	57.5	60.3	62.1	61.7	63.3	62.8	64.4	66.4	66.3	66.2	66.4

Ratings based on 1.0 service factor. For A.G.M.A. recommended practice on service factors, see page 11.

Horsepower and Torque Ratings • Double Worm

WORM SPEED (RPM)	Unit Size	35	40	50	60	70	80	90	100	120	140	170	200
	Center Distance	3.5	4	5	6	7	8	9	10	12	14	17	20
	Total Actual Ratio	290.0	290.0	285.2	285.2	285.2	285.2	285.2	285.2	287.6	287.6	287.6	287.6
	Ratio Combinations	9-2/3 30	9-2/3 30	9-2/3 29-1/2	9-2/3 29-1/2	9-2/3 29-1/2	9-2/3 29-1/2	9-2/3 29-1/2	9-2/3 29-1/2	9-3/4 29-1/2	9-3/4 29-1/2	9-3/4 29-1/2	9-3/4 29-1/2
1750	Mech. Input HP	0.932	1.17	1.90	2.96	4.22	5.94	8.10	10.8	16.8	23.8	39.1	56.7
	Out.Torq., in.lbs.	5230	7090	12100	20000	29200	42000	57600	78500	127000	180000	296000	430000
	Therm. Input HP	0.930	1.16	1.88	2.96	4.22	5.94	7.62	9.39	15.9	23.1	30.0	47.0
	Output RPM	6.03	6.03	6.14	6.14	6.14	6.14	6.14	6.14	6.08	6.08	6.08	6.08
	Efficiency%	53.7	58.0	62.1	65.8	67.4	68.8	0.692	70.8	73.0	73.1	73.0	73.2
1450	Mech. Input HP	0.784	0.991	1.62	2.52	3.61	5.08	6.95	9.18	14.5	20.8	34.3	50.0
	Out.Torq., in.lbs.	5300	7180	12300	20300	29300	42800	58800	80000	130000	187000	308000	450000
	Therm. Input HP	0.780	0.980	1.59	2.52	3.60	5.08	6.65	7.93	13.8	20.2	28.0	44.0
	Output RPM	5.00	5.00	5.08	5.08	5.08	5.08	5.08	5.08	5.04	5.04	5.04	5.04
	Efficiency%	53.6	57.5	61.4	65.0	65.4	68.0	68.3	70.3	71.7	71.7	71.8	72.0
1150	Mech. Input HP	0.641	0.806	1.32	2.07	2.96	4.17	5.74	7.48	12.1	17.5	29.0	42.7
	Out.Torq., in.lbs.	5370	7280	12500	20600	30300	43700	60400	81000	134000	194000	320000	472000
	Therm. Input HP	0.638	0.798	1.30	2.07	2.96	4.17	5.55	7.06	11.5	17.0	26.0	41.0
	Output RPM	3.96	3.96	4.03	4.03	4.03	4.03	4.03	4.03	4.00	4.00	4.00	4.00
	Efficiency%	52.7	56.8	60.5	63.7	65.5	67.1	67.3	69.3	70.3	70.2	70.1	70.1
865	Mech. Input HP	0.501	0.626	1.00	1.66	2.30	3.23	4.47	5.84	9.48	13.9	23.0	34.2
	Out.Torq., in.lbs.	5430	7370	12600	21000	30600	44200	61400	83000	137000	201000	334000	495000
	Therm. Input HP	0.495	0.615	0.998	1.65	2.30	2.21	4.47	5.84	9.48	13.2	22.5	33.5
	Output RPM	2.98	2.98	3.03	3.03	3.03	3.03	3.03	3.03	3.01	3.01	3.01	3.01
	Efficiency %	51.3	55.7	60.8	60.7	64.0	65.8	66.1	68.4	69.0	69.0	69.1	69.0
575	Mech. Input HP	0.348	0.431	0.694	1.12	1.58	2.21	3.08	4.00	6.47	9.82	16.5	24.6
	Out.Torq., in.lbs.	5500	7460	12800	21300	30900	44200	61700	83000	137000	208000	349000	519000
	Therm. Input HP	0.340	0.419	0.681	1.09	1.57	2.21	3.06	4.00	6.47	9.02	15.4	22.9
	Output RPM	1.98	1.98	2.02	2.02	2.02	2.02	2.02	2.02	2.00	2.00	2.00	2.00
	Efficiency%	49.7	54.4	59.2	61.0	62.4	64.0	64.2	66.4	67.2	67.2	67.2	67.0
300	Mech. Input HP	0.196	0.237	0.379	0.612	0.870	1.19	1.69	2.21	3.59	5.53	9.32	13.9
	Out.Torq., in.lbs.	5560	7550	13000	21600	31500	44200	63100	84600	140000	215000	363000	544000
	Therm. Input HP	0.189	0.227	0.367	58.8	0.847	1.19	1.65	2.17	3.52	4.91	8.37	12.4
	Output RPM	1.03	1.03	1.05	1.05	1.05	1.05	1.05	1.05	1.04	1.04	1.04	1.04
	Efficiency %	46.6	52.4	57.3	59.0	60.3	62.0	62.1	63.8	64.4	64.4	64.5	64.6

WORM SPEED (RPM)	Unit Size	35	40	50	60	70	80	90	100	120	140	170	200
	Center Distance	3.5	4	5	6	7	8	9	10	12	14	17	20
	Total Actual Ratio	317.8	317.8	317.8	317.8	317.8	317.8	317.8	317.8	300.7	288.5	288.5	288.5
	Ratio Combinations	15-1/2 20-1/2	15-1/2 20-1/2	15-1/2 20-1/2	15-1/2 20-1/2	15-1/2 20-1/2	15-1/2 20-1/2	15-1/2 20-1/2	15-1/2 20-1/2	14-2/3 20-1/2	14-2/3 19-2/3	14-2/3 19-2/3	14-2/3 19-2/3
1750	Mech. Input HP	0.765	0.991	1.72	2.77	4.22	5.83	7.95	10.8	18.0	18.0	36.8	46.9
	Out.Torq., in.lbs.	5060	6930	12800	21000	32400	45100	64000	87500	135000	135000	277000	353000
	Therm. Input HP	0.760	0.976	1.56	2.77	4.22	5.82	7.95	8.70	13.5	18.0	34.4	43.5
	Output RPM	5.51	5.51	5.51	5.51	5.51	5.51	5.51	5.51	5.82	6.07	6.07	6.07
	Efficiency%	57.7	61.1	64.8	66.2	67.1	69.1	70.3	70.8	69.3	72.2	72.4	72.4
1450	Mech. Input HP	0.642	0.832	1.45	2.35	3.62	4.97	6.82	9.07	15.5	16.4	33.5	43.1
	Out.Torq., in.lbs.	5090	6990	12900	21200	32800	46800	65500	88400	139000	147000	300000	386000
	Therm. Input HP	0.635	0.817	1.43	2.33	3.62	4.93	6.82	8.45	12.7	16.4	31.4	39.9
	Output RPM	4.56	4.56	4.56	4.56	4.56	4.56	4.56	4.56	4.82	5.03	5.03	5.03
	Efficiency%	57.5	60.8	64.3	65.6	65.6	68.1	69.5	70.6	68.6	71.5	71.4	71.4
1150	Mech. Input HP	0.519	0.669	1.18	1.90	2.89	4.05	5.49	7.38	12.5	15.0	29.9	38.3
	Out.Torq., in.lbs.	5130	7040	13000	21500	32800	47500	65600	88400	139000	167000	323000	413000
	Therm. Input HP	0.510	0.652	1.15	1.86	2.89	3.96	5.48	7.38	12.0	15.0	28.0	35.5
	Output RPM	3.62	3.62	3.62	3.62	3.62	3.62	3.62	3.62	3.82	3.99	3.99	3.99
	Efficiency%	56.7	60.4	63.4	65.1	63.5	67.3	68.6	68.8	67.5	70.4	68.3	68.2
865	Mech. Input HP	0.401	0.516	0.910	1.47	2.25	3.16	4.30	5.42	9.83	13.4	26.6	34.0
	Out.Torq., in.lbs.	5160	7090	13100	21700	32200	48200	66700	88800	141000	192000	330000	422000
	Therm. Input HP	0.391	0.499	0.880	1.43	2.23	3.04	4.22	5.40	9.70	13.4	25.1	31.8
	Output RPM	2.72	2.72	2.72	2.72	2.72	2.72	2.72	2.72	2.88	3.00	3.00	3.00
	Efficiency %	55.7	59.4	62.3	63.7	63.5	65.9	67.0	70.7	65.4	68.2	59.1	59.0
575	Mech. Input HP	0.276	0.354	0.623	1.01	1.57	2.19	3.00	3.91	6.82	9.99	16.8	25.2
	Out.Torq., in.lbs.	5200	7140	13200	22000	33600	48900	67800	90400	144000	212000	357000	533000
	Therm. Input HP	0.268	0.340	0.597	0.970	1.53	2.08	2.90	3.82	6.58	9.11	14.0	22.7
	Output RPM	1.81	1.81	1.81	1.81	1.81	1.81	1.81	1.81	1.91	1.99	1.99	1.99
	Efficiency%	54.0	57.9	61.1	62.4	61.5	64.0	64.8	66.4	64.1	67.0	67.0	66.9
300	Mech. Input HP	0.154	0.196	0.341	0.554	0.863	1.21	1.66	2.17	3.76	5.54	9.37	14.0
	Out.Torq., in.lbs.	5230	7190	13400	22200	34000	49600	68800	92000	147000	216000	367000	550000
	Therm. Input HP	0.148	0.187	0.324	0.527	0.833	1.13	1.58	2.09	3.55	4.94	8.23	12.2
	Output RPM	0.944	0.944	0.944	0.944	0.944	0.944	0.944	0.944	0.998	1.04	1.04	1.04
	Efficiency %	51.0	55.0	58.7	60.0	59.0	61.5	62.1	63.3	62.0	64.5	64.6	64.9

Horsepower and Torque Ratings • Double Worm

WORM SPEED (RPM)	Unit Size	35	40	50	60	70	80	90	100	120	140	170	200
	Center Distance	3.5	4	5	6	7	8	9	10	12	14	17	20
	Total Actual Ratio	379.8	379.8	379.8	379.8	379.8	379.8	379.8	379.8	359.3	359.3	359.3	359.3
	Ratio Combinations	15-1/2 24-1/2	15-1/2 24-1/2	15-1/2 24-1/2	15-1/2 24-1/2	15-1/2 24-1/2	15-1/2 24-1/2	15-1/2 24-1/2	15-1/2 24-1/2	14-2/3 24-1/2	14-2/3 24-1/2	14-2/3 24-1/2	14-2/3 24-1/2
1750	Mech. Input HP	0.693	0.804	1.47	2.36	3.56	4.96	6.85	9.00	15.0	18.0	34.7	46.9
	Out.Torq., in.lbs.	5140	6710	12500	20500	31600	45400	62800	85000	139000	167000	322000	435000
	Therm. Input HP	0.688	0.800	1.47	2.33	3.56	4.96	6.63	8.46	13.5	18.0	30.0	43.5
	Output RPM	4.61	4.61	4.61	4.61	4.61	4.61	4.61	4.61	4.87	4.87	4.87	4.87
	Efficiency%	54.2	61.0	62.2	63.4	64.9	66.9	67.0	69.0	71.6	71.7	71.7	71.7
1450	Mech. Input HP	0.575	0.704	1.24	1.99	3.02	4.18	5.82	7.63	12.2	16.4	28.5	42.7
	Out.Torq., in.lbs.	5170	6760	12600	20600	31900	46000	63700	85900	142000	191000	332000	482000
	Therm. Input HP	0.570	0.696	1.24	1.96	3.02	4.18	5.82	7.50	12.2	16.4	28.3	39.9
	Output RPM	3.82	3.82	3.82	3.82	3.82	3.82	3.82	3.82	4.04	4.04	4.04	4.04
	Efficiency%	54.5	58.2	61.6	63.0	64.0	66.7	66.3	68.2	74.5	74.6	74.4	72.2
1150	Mech. Input HP	0.469	0.572	0.970	1.61	2.44	3.38	4.72	6.13	10.1	14.6	14.6	35.6
	Out.Torq., in.lbs.	5210	6810	12700	20900	32100	46100	64000	85900	142000	205000	205000	498000
	Therm. Input HP	0.462	0.562	0.960	1.57	2.42	3.37	4.70	6.13	10.1	14.1	14.1	34.3
	Output RPM	3.03	3.03	3.03	3.03	3.03	3.03	3.03	3.03	3.20	3.20	3.20	3.20
	Efficiency%	53.4	57.2	63.1	62.4	63.3	65.6	65.1	67.3	71.4	71.3	71.1	71.1
865	Mech. Input HP	0.361	0.440	0.779	1.24	1.90	2.65	3.66	4.70	7.58	11.3	18.8	27.5
	Out.Torq., in.lbs.	5250	6860	12800	21100	32500	46800	64900	86500	142000	210000	352000	514000
	Therm. Input HP	0.353	0.429	0.764	1.20	1.86	2.61	3.59	4.67	7.57	10.6	17.6	25.7
	Output RPM	2.28	2.28	2.28	2.28	2.28	2.28	2.28	2.28	2.41	2.41	2.41	2.41
	Efficiency %	52.5	56.4	59.6	61.4	62.0	63.7	64.1	66.5	71.6	71.4	71.4	71.3
575	Mech. Input HP	0.248	0.301	0.535	0.853	1.32	1.83	2.54	3.28	5.42	8.05	13.6	19.8
	Out.Torq., in.lbs.	5250	6900	13000	21300	32900	47400	66000	88000	145000	215000	363000	531000
	Therm. Input HP	0.353	0.292	0.520	0.816	1.28	1.78	2.45	3.20	5.30	7.40	12.3	17.9
	Output RPM	1.51	1.51	1.51	1.51	1.51	1.51	1.51	1.51	1.60	1.60	1.60	1.60
	Efficiency%	52.5	55.0	58.2	60.0	59.9	62.1	62.5	64.5	68.0	67.9	67.9	68.1
300	Mech. Input HP	0.137	0.164	0.293	0.470	0.734	0.996	1.41	1.82	3.03	4.50	7.62	11.2
	Out.Torq., in.lbs.	5320	6950	13100	21500	33300	48000	66900	89400	148000	220000	373000	547000
	Therm. Input HP	0.132	0.158	0.283	0.445	0.703	0.954	1.34	1.75	2.90	4.04	6.72	9.80
	Output RPM	0.790	0.790	0.790	0.790	0.790	0.790	0.790	0.790	0.835	0.835	0.835	0.835
	Efficiency %	48.7	53.1	55.8	57.4	56.9	60.4	59.6	61.5	64.9	64.9	64.9	64.9

WORM SPEED (RPM)	Unit Size	35	40	50	60	70	80	90	100	120	140	170	200
	Center Distance	3.5	4	5	6	7	8	9	10	12	14	17	20
	Total Actual Ratio	420.3	420.3	420.3	420.3	420.3	420.3	420.3	420.3	420.3	403.2	403.2	403.2
	Ratio Combinations	20-1/2 20-1/2	20-1/2 20-1/2	20-1/2 20-1/2	20-1/2 20-1/2	20-1/2 20-1/2	20-1/2 20-1/2	20-1/2 20-1/2	20-1/2 20-1/2	20-1/2 20-1/2	20-1/2 19-2/3	20-1/2 19-2/3	20-1/2 19-2/3
1750	Mech. Input HP	0.615	0.795	1.36	2.21	3.32	4.67	6.40	8.56	13.1	14.0	28.1	37.8
	Out.Torq., in.lbs.	5110	7010	12900	21400	32800	47100	65500	88400	139000	149000	300000	403000
	Therm. Input HP	0.607	0.778	1.25	2.18	3.32	4.30	6.40	7.95	13.1	14.0	26.3	35.0
	Output RPM	4.16	4.16	4.16	4.16	4.16	4.16	4.16	4.16	4.16	4.34	4.34	4.34
	Efficiency%	54.8	58.2	62.6	63.9	65.3	66.6	67.6	68.2	70.1	73.3	73.5	73.4
1450	Mech. Input HP	0.516	0.672	1.15	1.85	2.78	3.98	5.38	7.17	11.0	12.8	25.7	34.2
	Out.Torq., in.lbs.	5140	7050	13000	21500	32800	47600	65800	88400	139000	162000	323000	430000
	Therm. Input HP	0.506	0.654	1.12	1.81	2.78	3.88	5.35	6.85	11.0	12.8	24.1	31.7
	Output RPM	3.45	3.45	3.45	3.45	3.45	3.45	3.45	3.45	3.45	3.60	3.60	3.60
	Efficiency%	54.5	57.4	62.1	63.8	64.6	65.5	67.0	67.5	69.2	72.2	71.8	71.7
1150	Mech. Input HP	0.416	0.538	0.932	1.50	2.26	3.24	4.41	5.79	8.88	11.7	21.8	30.8
	Out.Torq., in.lbs.	5160	7090	13100	21700	33100	48200	66700	88700	141000	186000	348000	491000
	Therm. Input HP	0.406	0.521	0.902	1.46	2.24	3.12	4.33	5.77	8.73	11.7	20.2	28.6
	Output RPM	2.74	2.74	2.74	2.74	2.74	2.74	2.74	2.74	2.74	2.85	2.85	2.85
	Efficiency%	53.9	57.2	61.1	62.7	63.6	64.6	65.7	66.5	69.1	71.9	72.1	72.2
865	Mech. Input HP	0.321	0.416	0.720	1.15	1.74	2.52	3.42	4.54	6.92	10.2	16.5	24.6
	Out.Torq., in.lbs.	5190	7130	13200	21900	33500	48700	67500	89900	144000	211000	355000	530000
	Therm. Input HP	0.312	0.400	0.692	1.11	1.71	2.40	3.32	4.46	6.70	9.29	15.0	22.3
	Output RPM	2.06	2.06	2.06	2.06	2.06	2.06	2.06	2.06	2.06	2.14	2.14	2.14
	Efficiency %	52.8	56.0	59.9	62.1	62.6	63.1	64.4	64.7	67.8	70.7	73.1	73.3
575	Mech. Input HP	0.220	0.284	0.493	0.795	1.20	1.74	2.36	3.14	4.82	7.09	11.9	17.9
	Out.Torq., in.lbs.	5220	7170	13300	22100	33800	49200	68300	91200	146000	214000	362000	543000
	Therm. Input HP	0.212	0.272	0.471	0.760	1.17	1.64	2.26	3.04	4.60	6.38	10.6	15.8
	Output RPM	1.37	1.37	1.37	1.37	1.37	1.37	1.37	1.37	1.37	1.43	1.43	1.43
	Efficiency%	51.6	54.7	58.5	60.3	60.8	61.4	62.9	63.1	65.6	68.4	68.7	68.7
300	Mech. Input HP	0.120	0.269	0.269	0.439	0.673	0.962	1.31	1.74	2.68	3.46	6.71	10.1
	Out.Torq., in.lbs.	5240	13400	13400	22200	34100	49800	69100	92400	148000	218000	370000	555000
	Therm. Input HP	0.115	0.255	0.255	0.416	0.647	0.897	1.24	1.67	2.52	3.50	5.84	8.70
	Output RPM	0.714	0.714	0.714	0.714	0.714	0.714	0.714	0.714	0. 714	0.744	0.744	0.744
	Efficiency %	49.3	52.5	56.4	57.4	71.4	58.6	59.8	60.0	62.5	65.1	65.1	65.1

Ratings based on 1.0 service factor. For A.G.M.A. recommended practice on service factors, see page 11.

Horsepower and Torque Ratings • Double Worm

WORM SPEED (RPM)	Unit Size	35	40	50	60	70	80	90	100	120	140	170	200
	Center Distance	3.5	4	5	6	7	8	9	10	12	14	17	20
	Total Actual Ratio	502.3	502.3	502.3	502.3	502.3	502.3	502.3	502.3	502.3	502.3	502.3	502.3
	Ratio Combinations	20-1/2 24-1/2	20-1/2 24-1/2	20- 1/2 24-1/2	20-1/2 24-1/2	20-1/2 24-1/2	20-1/2 24-1/2	20-1/2 24-1/2	20-1/2 24-1/2	20-1/2 24-1/2	20-1/2 24-1/2	20-1/2 24-1/2	20-1/2 24-1/2
1750	Mech. Input HP	0.561	0.677	1.17	1.87	2.81	3.95	5.48	7.24	11.5	14.0	27.4	37.8
	Out.Torq., in.lbs.	5190	6780	12700	20800	31900	46000	63700	85900	142000	173000	339000	467000
	Therm. Input HP	0.555	0.668	1.16	1.84	2.81	3.95	5.48	7.24	10.5	14.0	26.3	35.0
	Output RPM	3.48	3.48	3.48	3.48	3.48	3.48	3.48	3.48	3.48	3.48	3.48	3.48
	Efficiency%	51.1	55.4	60.0	61.3	62.8	64.4	64.3	65.6	68.2	68.3	68.4	68.3
1450	Mech. Input HP	0.470	0.567	0.988	1.57	2.39	3.34	4.67	5.97	9.57	12.8	23.4	34.0
	Out.Torq., in.lbs.	5220	6820	12800	20900	32200	46200	64100	85900	142000	190000	346000	504000
	Therm. Input HP	0.462	0.556	0.976	1.53	2.37	3.32	4.64	5.97	9.57	12.8	2.22	31.7
	Output RPM	2.89	2.89	2.89	2.89	2.89	2.89	2.89	2.89	2.89	2.89	2.89	2.89
	Efficiency%	50.9	55.1	59.1	61.1	61.6	63.5	62.9	65.9	68.0	68.0	67.9	67.9
1150	Mech. Input HP	0.380	0.457	0.800	1.27	1.94	2.71	3.82	4.85	7.66	11.3	18.9	27.6
	Out.Torq., in.lbs.	5250	6860	12800	21100	32500	46700	64900	86400	142000	211000	354000	516000
	Therm. Input HP	0.371	0.446	0.785	1.23	1.90	2.67	3.75	4.82	7.63	10.6	17.6	25.7
	Output RPM	2.29	2.29	2.29	2.29	2.29	2.29	2.29	2.29	2.29	2.29	2.29	2.29
	Efficiency%	50.2	54.5	58.3	60.2	61.0	62.6	61.7	64.7	67.6	67.8	67.9	67.8
865	Mech. Input HP	0.292	0.352	0.617	0.982	1.51	2.10	2.99	3.77	5.97	8.86	14.9	21.8
	Out.Torq., in.lbs.	5270	6890	12900	21300	32800	47200	65700	87600	145000	214000	361000	528000
	Therm. Input HP	0.284	0.342	0.601	0.942	1.47	2.05	2.90	3.70	5.86	8.18	13.6	19.8
	Output RPM	1.72	1.72	1.72	1.72	1.72	1.72	1.72	1.72	1.72	1.72	1.72	1.72
	Efficiency %	49.4	53.4	57.3	59.2	59.3	61.3	60.0	63.4	66.2	66.1	66.1	66.2
575	Mech. Input HP	0.200	0.240	0.423	0.677	1.06	1.46	2.06	2.62	4.14	6.15	10.4	15.2
	Out.Torq., in.lbs.	5300	6930	13000	21400	33100	47700	66400	88700	147000	218000	369000	540000
	Therm. Input HP	0.193	0.232	0.410	0.644	1.02	1.41	1.98	2.54	4.00	5.58	9.30	13.5
	Output RPM	1.14	1.14	1.14	1.14	1.14	1.14	1.14	1.14	1.14	1.14	1.14	1.14
	Efficiency%	48.3	52.4	55.8	57.5	56.8	59.3	58.4	61.4	64.5	64.4	64.2	64.6
300	Mech. Input HP	0.111	0.131	0.233	0.373	0.586	0.808	1.14	1.45	2.22	3.30	5.58	8.20
	Out.Torq., in.lbs.	5330	6960	13100	21600	33400	48200	67200	89800	149000	222000	376000	552000
	Therm. Input HP	0.107	0.126	0.224	0.352	0.560	0.771	1.08	1.39	2.11	2.94	4.88	7.13
	Output RPM	0.597	0.597	0.597	0.597	0.597	0.597	0.597	0.597	0.597	0.597	0.597	0.597
	Efficiency %	45.4	50.3	53.3	54.9	54.0	59.7	55.9	58.6	63.8	63.8	63.9	63.8

WORM SPEED (RPM)	Unit Size	35	40	50	60	70	80	90	100	120	140	170	200
	Center Distance	3.5	4	5	6	7	8	9	10	12	14	17	20
	Total Actual Ratio	620.0	620.0	620.0	620.0	620.0	620.0	620.0	620.0	586.6	579.3	579.3	579.3
	Ratio Combinations	15-1/2 40	15-1/2 40	15-1/2 40	15-1/2 40	15-1/2 40	15-1/2 40	15-1/2 40	15-1/2 40	14-2/3 40	14-2/3 39-/12	14-2/3 39-/12	14-2/3 39-/12
1750	Mech. Input HP	0.559	0.650	1.09	1.68	2.46	3.44	4.83	6.30	10.2	15.6	25.2	38.4
	Out.Torq., in.lbs.	5190	6900	12500	20400	30800	44300	60700	83000	136000	190000	306000	465000
	Therm. Input HP	0.545	0.647	1.07	1.68	2.42	3.44	4.58	6.30	10.2	15.6	25.0	30.0
	Output RPM	2.82	2.82	2.82	2.82	2.82	2.82	2.82	2.82	2.98	3.02	3.02	3.02
	Efficiency%	41.6	47.6	51.5	54.4	56.1	57.7	56.3	59.0	63.1	58.4	58.3	58.0
1450	Mech. Input HP	0.451	0.547	0.913	1.42	2.08	2.92	4.14	5.35	8.73	12.2	19.9	30.4
	Out.Torq., in.lbs.	5230	6950	12600	20600	31100	44800	61600	84400	138000	193000	315000	478000
	Therm. Input HP	0.446	0.544	0.898	1.41	2.08	2.92	3.92	5.35	8.73	12.2	19.7	28.0
	Output RPM	2.34	2.34	2.34	2.34	2.34	2.34	2.34	2.34	2.47	2.50	2.50	2.50
	Efficiency%	43.0	47.1	51.2	54.0	55.7	56.9	55.3	58.5	62.0	62.8	62.7	62.5
1150	Mech. Input HP	0.365	0.444	0.747	1.15	1.69	2.36	3.39	4.36	7.02	9.85	16.4	25.2
	Out.Torq., in.lbs.	5270	7000	12700	20800	31500	44900	62600	84400	138000	194000	324000	494000
	Therm. Input HP	0.358	0.438	0.728	0.728	1.67	2.35	3.16	4.36	7.02	9.81	15.8	24.3
	Output RPM	1.85	1.85	1.85	1.85	1.85	1.85	1.85	1.85	1.96	1.98	1.98	1.98
	Efficiency%	42.5	46.4	50.1	53.4	55.0	56.1	54.4	57.0	61.2	62.0	62.0	61.8
865	Mech. Input HP	0.280	0.343	0.577	0.887	1.34	1.84	2.66	3.38	5.46	7.75	13.0	20.0
	Out.Torq., in.lbs.	5310	7050	12800	21000	31900	45500	63600	84900	140000	198000	332000	510000
	Therm. Input HP	0.273	0.336	0.558	0.865	1.31	1.81	2.44	3.36	5.40	7.55	12.2	18.7
	Output RPM	1.40	1.40	1.40	1.40	1.40	1.40	1.40	1.40	1.47	1.49	1.49	1.49
	Efficiency %	41.9	45.5	49.2	52.5	52.7	54.8	53.0	55.6	60.0	60.6	60.4	60.4
575	Mech. Input HP	0.192	0.236	0.399	0.613	0.928	1.28	1.83	2.37	3.82	5.43	9.16	14.1
	Out.Torq., in.lbs.	5350	7100	12900	21200	32300	46100	64500	86400	143000	202000	341000	526000
	Therm. Input HP	0.186	0.230	0.382	0.592	0.897	1.24	1.66	2.32	3.70	5.18	8.35	12.8
	Output RPM	0.927	0.927	0.927	0.927	0.927	0.927	0.927	0.927	0.980	0.992	0.992	0.992
	Efficiency%	40.9	44.2	47.8	51.0	51.2	53.2	51.8	53.5	58.0	58.7	58.7	58.7
300	Mech. Input HP	0.106	0.128	0.220	0.339	0.514	0. 715	1.01	1.33	2.14	3.04	5.14	7.95
	Out.Torq., in.lbs.	5380	7150	13000	21400	32600	46700	65400	87700	146000	207000	350000	542000
	Therm. Input HP	0.102	0.124	0.209	0.324	0.492	0.686	0.900	1.28	2.03	2.84	4.57	7.00
	Output RPM	0.484	0.484	0.484	0.484	0.484	0.484	0.484	0.484	0.511	0.518	0.518	0.518
	Efficiency %	38.9	42.8	45.6	48.6	48.7	50.1	49.8	50.6	55.2	55.8	55.9	56.0

Horsepower and Torque Ratings • Double Worm

WORM SPEED (RPM)	Unit Size	35	40	50	60	70	80	90	100	120	140	170	200
	Center Distance	3.5	4	5	6	7	8	9	10	12	14	17	20
	Total Actual Ratio	775.0	775.0	775.0	775.0	775.0	775.0	775.0	775.0	733.3	733.3	733.3	733.3
	Ratio Combinations	15-1/2 50	15-1/2 50	15-1/2 50	15-1/2 50	15-1/2 50	15-1/2 50	15-1/2 50	15-1/2 50	14-2/3 50	14-2/3 50	14-2/3 50	14-2/3 50
1750	Mech. Input HP	0.451	0.519	0.898	1.40	2.08	2.87	3.90	5.12	8.57	12.6	20.8	31.4
	Out.Torq., in.lbs.	4880	6280	11900	19600	29800	42800	59600	80000	131000	186000	307000	464000
	Therm. Input HP	0.444	0.519	0.877	1.37	2.01	2.87	3.90	4.80	8.40	11.7	19.4	25.0
	Output RPM	2.26	2.26	2.26	2.26	2.26	2.26	2.26	2.26	2.39	2.39	2.39	2.39
	Efficiency%	38.8	43.4	47.4	50.0	51.2	53.4	54.8	56.0	55.9	55.2	56.0	55.9
1450	Mech. Input HP	0.380	0.435	0.758	1.20	1.77	2.44	3.35	4.37	7.35	10.8	18.0	27.4
	Out.Torq., in.lbs.	4920	6300	12000	19800	30100	43200	60800	80900	133000	191000	316000	480000
	Therm. Input HP	0.372	0.435	0.740	1.16	1.76	2.43	3.35	4.37	7.16	10.0	16.7	23.0
	Output RPM	1.87	1.87	1.87	1.87	1.87	1.87	1.87	1.87	1.98	1.98	1.98	1.98
	Efficiency%	38.5	43.0	46.9	49.1	50.6	52.6	53.9	55.0	55.1	55.2	55.1	55.0
1150	Mech. Input HP	0.305	0.349	0.612	0.968	1.43	1.99	2.67	3.52	7.35	8.80	14.6	22.3
	Out.Torq., in.lbs.	4950	6300	12100	20000	30500	43800	60800	80900	133000	195000	326000	497000
	Therm. Input HP	0.297	0.348	0.592	0.930	1.41	1.96	2.67	3.52	5.67	7.93	13.2	19.3
	Output RPM	1.48	1.48	1.48	1.48	1.48	1.48	1.48	1.48	1.57	1.57	1.57	1.57
	Efficiency%	38.2	42.6	46.5	48.6	50.1	51.8	53.6	54.1	55.2	55.2	55.3	55.4
865	Mech. Input HP	0.235	0.271	0.474	0.753	1.12	1.56	2.10	2.77	4.76	7.06	14.6	18.0
	Out.Torq., in.lbs.	4980	6360	12200	20200	30900	44400	61500	82300	135000	200000	326000	514000
	Therm. Input HP	0.227	0.269	0.455	0.716	1.09	1.51	2.08	2.72	4.44	6.22	13.2	15.1
	Output RPM	1.12	1.12	1.12	1.12	1.12	1.12	1.12	1.12	1.18	1.18	1.18	1.18
	Efficiency %	37.6	41.5	45.5	47.5	48.7	50.5	51.8	52.7	53.0	53.0	53.3	53.2
575	Mech. Input HP	0.159	0.186	0.327	0.522	0.780	1.09	1.46	1.91	3.35	4.97	8.40	13.0
	Out.Torq., in.lbs.	5020	6400	12300	20400	31200	45000	62400	83600	138000	204000	344000	531000
	Therm. Input HP	0.153	0.183	0.311	0.491	0.750	1.04	1.42	1.85	3.06	4.28	7.15	10.5
	Output RPM	0.742	0.742	0.742	0.742	0.742	0.742	0. 742	0.742	0.784	0.784	0. 784	0.784
	Efficiency%	37.1	40.5	44.3	46.0	47.1	48.8	50.4	51.5	51.2	51.2	51.0	50.9
300	Mech. Input HP	0.088	0.102	0.181	0.289	0.427	0.605	0.817	1.08	1.87	2.79	4.73	7.34
	Out.Torq., in.lbs.	5050	6440	12400	20600	31600	45600	63300	85000	140000	209000	354000	548000
	Therm. Input HP	0.084	0.099	0.171	0.270	0.406	0.572	0. 785	1.03	1.68	2.35	3.92	5.75
	Output RPM	0.387	0.387	0.387	0.387	0.387	0.387	0.387	0.387	0.409	0.409	0.409	0.409
	Efficiency %	35.0	38.9	42.0	43.7	45.4	46.3	47.6	48.2	48.6	48.6	48.6	48.5

WORM SPEED (RPM)	Unit Size	35	40	50	60	70	80	90	100	120	140	170	200
	Center Distance	3.5	4	5	6	7	8	9	10	12	14	17	20
	Total Actual Ratio	900.0	900.0	885.0	885.0	885.0	885.0	870.0	870.0	870.0	870.0	870.0	870.0
	Ratio Combinations	30 30	30 30	30 29-1/2	30 29-1/2	30 29-1/2	30 29-1/2	29-1/2 29 1/2	29-1/2 29-1/2	29-1/2 29-1/2	29-1/2 29-1/2	29-1/2 29-1/2	29-1/2 29-1/2
1750	Mech. Input HP	0.413	0.509	0.794	1.24	1.77	2.43	3.41	4.40	7.13	11.2	18.9	26.5
	Out.Torq., in.lbs.	5500	7460	12800	21300	30900	44200	61700	82600	136000	208000	348000	488000
	Therm. Input HP	0.403	0.494	0.779	1.21	1.75	2.43	3.34	4.35	7.06	10.2	17.4	24.6
	Output RPM	1.94	1.94	1.98	1.98	1.98	1.98	2.01	2.01	2.01	2.01	2.01	2.01
	Efficiency%	41.1	45.2	50.8	53.9	54.9	57.1	57.7	59.9	60.9	58.8	58.8	58.8
1450	Mech. Input HP	0.344	0.425	0.666	1.06	1.48	2.04	2.89	3.68	6.12	9.36	15.8	23.6
	Out.Torq., in.lbs.	5520	7490	12900	21400	31100	44200	62200	83300	137000	210000	354000	528000
	Therm. Input HP	0.334	0.411	0.650	1.03	1.46	2.08	2.81	3.61	6.00	8.36	14.3	21.3
	Output RPM	1.61	1.61	1.64	1.64	1.64	1.64	1.67	1.67	1.67	1.67	1.67	1.67
	Efficiency%	41.1	45.0	50.4	52.5	54.5	56.3	56.8	59.8	59.4	59.4	59.3	59.1
1150	Mech. Input HP	0.287	0.342	0.538	0.857	1.21	1.64	2.34	2.99	4.89	7.34	12.3	18.4
	Out.Torq., in.lbs.	5550	7520	13000	21600	31300	44200	62700	84000	139000	213000	359000	536000
	Therm. Input HP	0.278	0.329	0.523	0.827	0.914	1.64	2.25	2.90	4.74	6.47	11.0	16.3
	Output RPM	1.28	1.28	1.30	1.30	1.30	1.30	1.32	1.32	1.32	1.32	1.32	1.32
	Efficiency%	39.2	44.6	49.7	51.9	53.5	55.6	56.2	59.0	59.6	60.9	61.1	61.2
865	Mech. Input HP	0.209	0.261	0.415	0.665	0.940	1.26	1.81	2.34	3.79	5.82	9.82	14.6
	Out.Torq., in.lbs.	5570	7550	13000	21700	31500	44200	63100	84700	140000	215000	364000	545000
	Therm. Input HP	0.202	0.250	0.402	0.638	0.914	1.26	1.73	2.25	3.64	5.07	8.65	12.8
	Output RPM	0.961	0.961	0.977	0.977	0.977	0.977	0.994	0.994	0.994	0.994	0.994	0.994
	Efficiency %	40.5	44.2	48.6	50.6	51.9	54.4	55.0	57.2	58.4	58.4	58.4	58.6
575	Mech. Input HP	0.144	0.179	0.287	0.462	0.652	1.26	1.24	1.61	2.65	4.09	6.92	10.4
	Out.Torq., in.lbs.	5590	7580	13100	21800	31600	44200	63600	85400	142000	218000	369000	554000
	Therm. Input HP	0.138	0.171	0.277	0.441	0.630	0.872	1.18	1.54	2.52	3.52	6.01	8.97
	Output RPM	0.639	0.639	0.650	0.650	0.650	0.650	0.661	0.661	0.661	0.661	0.661	0.661
	Efficiency%	39.4	42.9	46.9	48.6	50.1	52.3	53.6	55.6	56.0	55.9	55.9	55.6
300	Mech. Input HP	0.079	0.098	0.162	0.257	0.364	0.484	0.687	0.897	1.48	2.28	3.85	5.79
	Out.Torq., in.lbs.	5610	7610	3100	21900	31800	44200	64100	86100	143000	220000	374000	562000
	Therm. Input HP	0.075	0.093	0.155	0.244	0.350	0.484	0.647	.850	1.39	1.94	3.30	4.90
	Output RPM	0.333	0.333	0.339	0.339	0.339	0.339	0.345	0.345	0.345	0.345	0.345	0.345
	Efficiency %	37.5	41.0	43.7	45.8	47.0	49.1	51.0	52.5	53.0	53.0	53.1	53.1

Ratings based on 1.0 service factor. For A.G.M.A. recommended practice on service factors, see page 11.

Horsepower and Torque Ratings • Double Worm

WORM SPEED (RPM)	Unit Size	35	40	50	60	70	80	90	100	120	140	170	200
	Center Distance	3.5	4	5	6	7	8	9	10	12	14	17	20
	Total Actual Ratio	1025	1025	1025	1025	1025	1025	1025	1025	1025	1025	1025	1025
	Ratio Combinations	20-1/2 50	20-1/2 50	20-1/2 50	20-1/2 50	20-1/2 50	20-1/2 50	20-1/2 50	20-1/2 50	20-1/2 50	20-1/2 50	20-1/2 50	20-1/2 50
1750	Mech. Input HP	0.372	0.422	0.728	1.13	1.68	2.34	3.84	4.15	6.46	9.41	15.6	23.8
	Out.Torq., in.lbs.	4930	6300	12000	19900	30300	43500	58800	80900	133000	194000	322000	491000
	Therm. Input HP	0.364	0.422	0.708	1.09	1.66	2.32	3.22	4.15	6.46	9.04	15.0	22.0
	Output RPM	1.71	1.71	1.71	1.71	1.71	1.71	1.71	1.71	1.71	1.71	1.71	1.71
	Efficiency%	35.9	40.4	44.8	47.7	49.0	50.3	54.8	52.8	55.8	55.7	56.0	55.9
1450	Mech. Input HP	0.306	0.353	0.610	0.954	1.42	1.99	3.29	3.51	5.44	8.06	13.5	20.6
	Out.Torq., in.lbs.	4960	6320	12100	20000	30600	44000	59700	81200	133000	197000	329000	503000
	Therm. Input HP	0.297	0.352	0.589	0.915	1.39	1.95	2.71	3.50	5.44	7.61	12.7	18.6
	Output RPM	1.41	1.41	1.41	1.41	1.41	1.41	1.41	1.41	1.41	1.41	1.41	1.41
	Efficiency%	36.4	40.2	44.6	47.1	48.4	49.6	53.9	51.9	54.9	54.9	54.8	54.8
1150	Mech. Input HP	0.245	0.284	0.494	0.778	1.16	1.62	2.66	2.89	4.35	6.47	10.8	16.6
	Out.Torq., in.lbs.	4980	6360	12100	20200	30800	44400	60600	82200	135000	200000	336000	516000
	Therm. Input HP	0.237	0.281	0.474	0.740	1.13	1.57	2.18	2.84	3.38	6.00	10.0	14.6
	Output RPM	1.12	1.12	1.12	1.12	1.12	1.12	1.12	1.12	1.12	1.12	1.12	1.12
	Efficiency%	36.2	39.9	43.9	46.2	47.3	48.9	53.6	50.7	55.3	55.2	55.2	55.4
865	Mech. Input HP	0.187	0.217	0.377	0.598	0.909	1.27	2.10	2.25	3.49	5.17	8.70	13.4
	Out.Torq., in.lbs.	5010	6390	12300	20300	31100	44900	61500	83300	137000	204000	343000	528000
	Therm. Input HP	0.180	0.214	0.360	0.565	0.876	1.22	1.69	2.19	3.38	4.72	7.86	11.5
	Output RPM	0.844	0.844	0.844	0.844	0.844	0.844	0.844	0.844	0.844	0.844	0.844	0.844
	Efficiency %	35.9	39.4	43.5	45.5	45.9	47.3	51.8	49.5	52.7	52.8	52.8	52.9
575	Mech. Input HP	0.128	0.148	0.260	0.413	0.638	0.878	1.46	1.57	2.45	3.64	6.16	9.53
	Out.Torq., in.lbs.	5040	6420	12300	20500	31400	45300	62400	84300	139000	207000	350000	541000
	Therm. Input HP	0.122	0.145	0.246	0.387	0.610	0.835	1.16	1.51	2.34	3.27	5.46	8.00
	Output RPM	0.561	0.561	0.561	0.561	0.561	0.561	0.561	0.561	0.561	0.561	0.561	0.561
	Efficiency%	35.2	38.7	42.3	44.2	43.8	45.9	50.4	47.7	50.6	50.6	50.5	50.5
300	Mech. Input HP	0.069	0.080	0.142	0.227	0.364	0.491	0.817	0.875	1.38	2.06	3.49	5.46
	Out.Torq., in.lbs.	5060	6450	12400	20600	31700	45700	63300	85300	141000	211000	357000	553000
	Therm. Input HP	0.066	0.078	0.134	0.211	0.345	0.463	0.652	0.830	1.30	1.82	3.03	4.48
	Output RPM	0.293	0.293	0.293	0.293	0.293	0.293	0.293	0.293	0.293	0.293	0.293	0.293
	Efficiency %	33.7	37.2	40.6	42.3	40.4	43.2	47.6	45.3	47.5	47.4	47.5	47.1

WORM SPEED (RPM)	Unit Size	35	40	50	60	70	80	90	100	120	140	170	200
	Center Distance	3.5	4	5	6	7	8	9	10	12	14	17	20
	Total Actual Ratio	1200	1200	1200	1200	1200	1200	1180	1180	1180	1165	1165	1165
	Ratio Combinations	30 40	30 40	30 40	30 40	30 40	30 40	29-1/2 40	29-1/2 40	29-1/2 40	29-1/2 39-1/2	29-1/2 39-1/2	29-1/2 39-1/2
1750	Mech. Input HP	0.343	0.407	0.666	1.02	1.50	2.09	2.78	3.69	5.95	8.44	14.2	21.8
	Out.Torq., in.lbs.	5300	7050	12800	21000	31800	45400	63400	84600	140000	198000	332000	509000
	Therm. Input HP	0.334	0.399	0.645	1.00	1.47	2.06	2.56	3.68	5.88	8.23	13.3	20.4
	Output RPM	1.46	1.46	1.46	1.46	1.46	1.46	1.48	1.48	1.48	1.50	1.50	1.50
	Efficiency%	35.8	40.1	44.5	47.4	49.1	50.3	53.7	54.0	55.2	55.9	55.7	55.7
1450	Mech. Input HP	0.287	0.341	0.561	0.870	1.26	1.78	2.34	3.10	4.98	7.06	11.9	18.3
	Out.Torq., in.lbs.	5330	7070	12900	21100	32000	45800	63900	85400	141000	200000	337000	518000
	Therm. Input HP	0.279	0.333	0.540	0.845	0.998	1.74	2.14	3.06	4.87	6.81	11.0	16.9
	Output RPM	1.21	1.21	1.21	1.21	0.958	0.958	1.23	1.23	1.23	1.24	1.24	1.24
	Efficiency%	35.5	39.8	44.0	46.5	48.6	49.4	53.2	53.8	55.2	56.0	55.8	55.7
1150	Mech. Input HP	0.228	0.272	0.453	0.706	1.03	1.45	1.91	2.49	4.05	5.73	9.68	14.9
	Out.Torq., in.lbs.	5340	7100	12900	21200	32200	46100	64400	86200	143000	202000	342000	526000
	Therm. Input HP	0.221	0.265	0.434	0.682	0.998	1.41	1.73	2.44	3.92	5.46	8.82	13.5
	Output RPM	0.958	0.958	0.958	0.958	0.958	0.958	0.974	0.974	0.974	0.987	0.987	0.987
	Efficiency%	35.6	39.6	43.4	45.7	47.5	48.3	52.2	53.5	54.4	55.4	55.2	55.3
865	Mech. Input HP	0.175	0.208	0.352	0.548	0.804	1.12	1.49	1.93	3.18	4.50	7.62	11.8
	Out.Torq., in.lbs.	5360	7130	13000	21300	32400	46400	64900	87000	144000	205000	346000	534000
	Therm. Input HP	0.169	0.202	0.336	0.527	0.773	1.08	1.34	1.87	3.04	4.24	6.85	10.5
	Output RPM	0.721	0.721	0. 721	0.721	0.721	0.721	0.733	0.733	0.733	0.742	0.742	0.742
	Efficiency %	35.0	39.1	42.2	44.5	46.2	47.4	50.7	53.5	52.8	53.6	53.5	53.5
575	Mech. Input HP	0.120	0.143	0.244	0.389	0.560	0.774	1.03	1.34	2.21	3.13	5.32	8.22
	Out.Torq., in.lbs.	5390	7150	13000	21400	32600	46700	65400	87700	146000	207000	351000	543000
	Therm. Input HP	0.115	0.138	0.232	0.372	0.535	0.742	0.917	1.29	2.09	2.92	4.72	7.23
	Output RPM	0.479	0.479	0.479	0.479	0.479	0.479	0.487	0.487	0.487	0.493	0.493	0.493
	Efficiency%	34.2	38.1	40.6	41.9	44.3	45.9	49.2	50.6	51.0	51.8	51.6	51.7
300	Mech. Input HP	0.0660	0.078	0.136	0.211	0.314	0.433	0.572	0.743	1.24	1.74	2.97	4.61
	Out.Torq., in.lbs.	5400	7180	13100	21500	32800	47000	65900	88400	147000	209000	355000	551000
	Therm. Input HP	0.063	0.075	0.129	0.201	0.299	0.413	0.507	0.736	1.16	1.61	2.60	3.99
	Output RPM	0.250	0.250	0.250	0.250	0.250	0.250	0.254	0.254	0.254	0.257	0.257	0.257
	Efficiency %	32.5	36.3	38.1	40.4	41.4	43.0	46.5	48.0	48.0	49.0	48.9	48.8

Ratings based on 1.0 service factor. For A.G.M.A. recommended practice on service factors, see page 11.

Horsepower and Torque Ratings • Double Worm

WORM SPEED (RPM)	Unit Size	35	40	50	60	70	80	90	100	120	140	170	200
	Center Distance	3.5	4	5	6	7	8	9	10	12	14	17	20
	Total Actual Ratio	1500	1500	1500	1470	1470	1470	1470	1470	1470	1470	1470	1470
	Ratio Combinations	25	25	25	24-1/2	24-1/2	24-1/2	24-1/2	24-1/2	24-1/2	24-1/2	24-1/2	24-1/2
		60	60	60	60	60	60	60	60	60	60	60	60
1750	Mech. Input HP	0.291	0.321	0.534	0.814	1.20	1.67	2.29	3.00	4.67	7.00	11.6	17.2
	Out.Torq., in.lbs.	4670	5860	10900	18100	27600	40000	55300	74100	122000	185000	309000	460000
	Therm. Input HP	0.283	0.307	0.493	0. 793	1.19	1.67	2.27	3.00	4.67	6.66	11.0	16.3
	Output RPM	1.17	1.17	1.17	1.19	1.19	1.19	1.19	1.19	1.19	1.19	1.19	1.19
	Efficiency%	29.7	33.8	37.9	41.9	43.5	45.2	45.6	46.7	49.3	49.9	50.3	50.4
1450	Mech. Input HP	0.243	0.267	0.446	0.684	1.01	1.42	1.92	2.52	3.84	5.90	9.72	14.4
	Out.Torq., in.lbs.	4690	5880	11000	18200	27800	40300	55800	74600	122000	188000	315000	496000
	Therm. Input HP	0.235	0.254	0.410	0.662	0.994	1.41	1.89	2.50	3.84	5.54	9.05	13.4
	Output RPM	0.967	0.967	0.967	0.986	0.986	0.986	0.986	0.986	0.986	0.986	0.986	0.986
	Efficiency%	29.6	33.8	37.8	41.6	43.1	44.4	45.4	46.4	49.7	49.7	50.7	50.8
1150	Mech. Input HP	0.193	0.213	0.360	0.552	0.815	1.15	1.59	2.05	3.08	4.80	8.05	12.0
	Out.Torq., in.lbs.	4710	5900	11000	18300	28000	40700	56300	75400	122000	190000	320000	478000
	Therm. Input HP	0.186	0.202	0.329	0.531	0.797	1.13	1.55	2.02	3.08	4.44	7.37	10.9
	Output RPM	0.767	0.767	0.767	0.782	0.782	0.782	0.782	0.782	0.782	0.782	0. 782	0.782
	Efficiency%	29.7	33.7	37.3	41.1	42.7	42.7	43.9	45.5	49.2	49.2	49.4	49.5
865	Mech. Input HP	0.147	0.163	0.277	0.426	0.631	0.897	1.24	1.60	2.38	3.72	6.27	9.35
	Out.Torq., in.lbs.	4730	5920	11100	18400	28200	41000	56800	76100	122000	193000	325000	487000
	Therm. Input HP	0.141	0.154	0.252	0.408	0.613	0.876	1.20	1.56	2.38	3.40	5.65	8.35
	Output RPM	0.577	0.577	0.577	0.588	0.588	0.588	0.588	0.588	0.588	0.588	0.588	0.588
	Efficiency %	29.5	33.3	36.7	40.3	41.7	42.6	42.6	44.4	47.9	48.3	48.4	48.6
575	Mech. Input HP	0.101	0.110	0.191	0. 294	0.440	0.622	0.884	1.11	1.65	2.64	4.27	6.39
	Out.Torq., in.lbs.	4750	5950	11100	18500	28400	41300	57300	76800	122000	195000	331000	496000
	Therm. Input HP	0.096	0.104	0.173	0.280	0.424	0.603	0.845	1.02	1.65	2.38	3.78	5.60
	Output RPM	0.383	0.383	0.383	0.391	0.391	0.391	0.391	0.391	0.391	0.391	0.391	0.391
	Efficiency%	28.6	32.8	35.5	39.0	40.1	41.2	40.2	43.0	45.9	45.9	48.1	48.2
300	Mech. Input HP	0.055	0.060	0.106	0.163	0.247	0.348	0.480	0.621	0.910	1.47	2.49	3.73
	Out.Torq., in.lbs.	4770	5970	11200	18600	28600	41600	57800	77600	122000	198000	336000	505000
	Therm. Input HP	0.0530	0.057	0.095	0.154	0.237	0.335	0.455	0.593	0.910	1.31	2.17	3.21
	Output RPM	0.200	0.200	0.200	0.204	0.204	0.204	0.204	0.204	0.204	0.204	0. 204	0.204
	Efficiency %	27.2	31.1	33.6	37.0	37.4	38.7	39.0	40.5	43.4	43.5	43.7	43.9

WORM SPEED (RPM)	Unit Size	35	40	50	60	70	80	90	100	120	140	170	200
	Center Distance	3.5	4	5	6	7	8	9	10	12	14	17	20
	Total Actual Ratio	1600	1600	1600	1600	1600	1600	1600	1600	1600	1580	1580	1580
	Ratio Combinations	40	40	40	40	40	40	40	40	40	40	40	40
		40	40	40	40	40	40	40	40	40	39-1/2	39-1/2	39-1/2
1750	Mech. Input HP	0.281	0.333	0.553	0.821	1.22	1.68	2.23	2.96	4.68	6.66	11.1	17.1
	Out.Torq., in.lbs.	5330	7080	12900	21200	32100	45900	64200	85800	142000	201000	339000	522000
	Therm. Input HP	0.272	0.325	0.532	0.796	1.18	1.64	2.03	2.91	4.55	6.38	10.2	15.6
	Output RPM	1.09	1.09	1.09	1.09	1.09	1.09	1.09	1.09	1.09	1.11	1.11	1.11
	Efficiency%	33.0	36.9	36.9	44.7	45.9	47.4	49.9	50.3	52.6	53.2	53.6	53.7
1450	Mech. Input HP	0.235	0.276	0.459	0.694	1.02	1.44	1.89	2.50	3.94	5.61	9.34	14.4
	Out.Torq., in.lbs.	5350	7110	12900	21200	32300	46100	64600	86400	143000	203000	343000	528000
	Therm. Input HP	0.227	0.268	0.440	0.670	0.990	1.40	1.71	2.44	3.80	5.33	8.47	13.0
	Output RPM	0.906	0.906	0.906	0.906	0.906	0.906	0.906	0.906	0.906	0.918	0.918	0.918
	Efficiency%	32.8	37.1	40.5	44.0	45.3	46.0	49.1	49.7	52.2	52.7	53.5	53.4
1150	Mech. Input HP	0.188	0.221	0.366	0.560	0.819	1.14	1.54	2.02	3.19	4.54	7.68	11.9
	Out.Torq., in.lbs.	5360	7130	13000	21300	32400	46400	64900	87000	144000	205000	346000	535000
	Therm. Input HP	0.227	0.214	0.349	0.538	0.788	1.10	1.39	1.96	3.06	4.28	6.90	10.6
	Output RPM	0.719	0.719	0.719	0.719	0.719	0.719	0.719	0.719	0.719	0.728	0.728	0.728
	Efficiency%	32.8	36.8	40.5	43.4	45.2	46.4	47.9	49.1	51.4	52.1	52.0	52.0
865	Mech. Input HP	0.142	0.168	0.282	0.432	0.637	0.897	1.21	1.57	2.50	3.56	5.85	9.06
	Out.Torq., in.lbs.	5380	7150	13000	21400	32600	46600	65300	87600	145000	206000	350000	541000
	Therm. Input HP	0.181	0.163	0.268	0.414	0.610	0.862	1.08	1.51	2.38	3.33	5.20	7.99
	Output RPM	0.541	0.541	0.541	0.541	0.541	0.541	0.541	0.541	0.541	0.547	0.547	0.547
	Efficiency %	32.6	36.4	39.7	42.5	43.9	44.6	46.4	47.9	49.7	50.3	52.0	51.9
575	Mech. Input HP	0.096	0.115	0.194	0.301	0.441	0.623	0.824	1.08	1.75	2.49	4.22	6.54
	Out.Torq., in.lbs.	5400	7170	13100	21500	32700	46900	65700	88100	146000	208000	353000	547000
	Therm. Input HP	0.092	0.111	0.187	0.287	0.420	0.596	0.732	1.04	1.65	2.31	3.72	5.70
	Output RPM	0.359	0.359	0.359	0.359	0.359	0.359	0.359	0.359	0.359	0.364	0.364	0.364
	Efficiency%	31.9	35.5	38.4	40.7	42.4	42.9	45.5	46.3	47.7	48.2	48.3	48.3
300	Mech. Input HP	0.053	0.064	0.109	0.167	0.249	0.347	0.475	0.616	.983	1.40	2.38	3.69
	Out.Torq., in.lbs.	5410	7180	13100	21600	32900	47100	66100	88700	147000	210000	356000	553000
	Therm. Input HP	0.050	0.061	0.103	0.159	0.236	0.330	0.420	0.587	0.923	1.29	2.08	3.18
	Output RPM	0.188	0.188	0.188	0.188	0.188	0.188	0.188	0.188	0.188	0.190	0.190	0.190
	Efficiency %	30.3	33.3	35.8	38.4	39.3	40.4	41.4	42.8	44.5	45.1	45.0	45.1

Ratings based on 1.0 service factor. For A.G.M.A. recommended practice on service factors, see page 11.

Horsepower and Torque Ratings • Double Worm

WORM SPEED (RPM)	Unit Size	35	40	50	60	70	80	90	100	120	140	170	200
	Center Distance	3.5	4	5	6	7	8	9	10	12	14	17	20
	Total Actual Ratio	1800	1800	1800	1800	1800	1800	1770	1770	1770	1770	1770	1770
	Ratio Combinations	30 60	30 60	30 60	30 60	30 60	30 60	29-1/2 60	29-1/2 60	29-1/2 60	29-1/2 60	29-1/2 60	29-1/2 60
1750	Mech. Input HP	0.257	0.278	0.457	0.712	1.05	1.46	1.95	2.57	4.02	6.15	10.3	15.4
	Out.Torq., in.lbs.	4690	5880	11000	18200	27800	40400	55800	74600	122000	188000	314000	469000
	Therm. Input HP	0.249	0.265	0.420	0.689	1.03	1.45	1.95	2.55	4.02	5.77	9.60	14.3
	Output RPM	0.972	0.972	0.927	0.972	0.972	0.972	0.988	0.988	0.988	0.988	0.988	0.988
	Efficiency%	28.1	32.6	37.1	39.4	41.0	42.6	44.1	45.6	47.6	47.8	47.9	47.7
1450	Mech. Input HP	0.207	0.236	0.371	0.598	0.895	1.24	1.64	2.15	3.47	5.39	9.06	13.6
	Out.Torq., in.lbs.	4710	5900	11000	18300	28000	40600	56300	75200	122000	190000	319000	476000
	Therm. Input HP	0.200	0.224	0.340	0.576	0.867	1.22	1.63	2.12	3.47	5.00	8.32	12.4
	Output RPM	0.806	0.806	0.806	0.806	0 806	0.806	0.819	0.819	0.819	0.819	0.819	0.819
	Efficiency%	29.0	32.0	38.0	39.0	40.0	41.9	43.7	45.4	45.7	45.8	45.8	45.6
1150	Mech. Input HP	0.170	0.189	0.305	0.487	0.715	1.00	1.32	1.75	2.68	4.21	7.09	10.1
	Out.Torq., in.lbs.	4720	5920	11100	18400	28200	40900	56700	75900	122000	192000	324000	484000
	Therm. Input HP	0.163	0.179	0.278	0.466	0 695	0.980	1.30	1.71	2.68	3.86	6.42	9.60
	Output RPM	0 639	0.639	0.639	0.639	0 639	0.639	0.650	0.650	0.650	0.650	0.650	0.650
	Efficiency%	28.2	31.7	36.8	38.3	40.0	41.4	43.5	44.7	46.9	47.0	47.0	46.7
865	Mech. Input HP	0.132	0.144	0.236	0.374	0.553	0.782	1.03	1.36	2.07	3.29	5.56	8.36
	Out.Torq., in.lbs.	4740	5940	11100	18500	28300	41200	57100	76500	122000	194000	328000	492000
	Therm. Input HP	0.126	0.136	0.214	0.357	0.535	0.760	1.01	1.32	2.07	2.98	4.96	7.40
	Output RPM	0.480	0.480	0.480	0.480	0.480	0.480	0.489	0.489	0.489	0.489	0.489	0.489
	Efficiency %	27.5	31.4	36.0	37.6	39.0	40.1	42.1	43.5	45.7	45.8	45.8	45.6
575	Mech. Input HP	0.089	0.100	0.162	0.261	0.385	0.549	0.714	0.947	1.43	2.30	3.89	5.88
	Out.Torq., in.lbs.	4760	5960	11200	18600	28500	41400	57500	77100	122000	196000	333000	499000
	Therm. Input HP	0.0850	0.0940	0.147	0.248	0.370	0.530	0.692	.910	1.43	2.06	3.43	5.12
	Output RPM	0.319	0.319	0.319	0.319	0.319	0.319	0.325	0.325	0.325	0.325	0.325	0.325
	Efficiency%	27.1	30.2	34.8	36.0	37.5	38.2	40.8	42.0	44.0	44.0	44.0	43.8
300	Mech. Input HP	0.0490	0.0540	0.091	0.145	0.215	0.307	0.403	0.517	0.790	1.28	2.18	3.31
	Out.Torq., in.lbs.	4770	5970	11200	18600	28600	41700	57900	77700	122000	198000	337000	507000
	Therm. Input HP	0.046	0.050	0 082	0.137	0.206	0.295	0.388	0.493	0.790	1.14	1.90	2.84
	Output RPM	0.167	0.167	0.167	0.167	0.167	0.167	0.169	0.169	0.169	0.169	0.169	0.169
	Efficiency %	25.8	29.3	32.5	34.0	35.2	35.9	38.0	40.4	41.5	41.5	41.5	41.2

WORM SPEED (RPM)	Unit Size	35	40	50	60	70	80	90	100	120	140	170	200
	Center Distance	3.5	4	5	6	7	8	9	10	12	14	17	20
	Total Actual Ratio	2000	2000	2000	2000	2000	2000	2000	2000	2000	2000	2000	2000
	Ratio Combinations	40 50	40 50	40 50	40 50	40 50	40 50	40 50	40 50	40 50	40 50	40 50	40 50
1750	Mech. Input HP	0.320	0.270	0.455	0.706	1.06	1.46	1.96	2.53	3.81	5.84	9.83	14.7
	Out.Torq., in.lbs.	4980	6380	12200	20300	31200	44800	62100	83200	133000	203000	342000	527000
	Therm. Input HP	0.232	0.266	0.434	0.667	1.02	1.40	1.92	2.46	3.81	5.34	8.90	12.7
	Output RPM	0.875	0.875	0.875	0.875	0.875	0.875	0.875	0.875	0.875	0.875	0.875	0.875
	Efficiency%	28.8	32.9	37.4	40.0	40.8	42.7	43.4	45.7	48.5	48.4	48.4	49.6
1450	Mech. Input HP	0.266	0.219	0.377	0.590	0.890	1.21	1.33	2.12	3.19	4.93	8.33	12.6
	Out.Torq., in.lbs.	5000	6400	12300	20400	31200	45000	62800	83700	133000	205000	346000	534000
	Therm. Input HP	0.192	0.216	0.359	0.555	0.855	1.16	1.29	2.05	3.19	4.47	7.46	10.7
	Output RPM	0.725	0.725	0.725	0.725	0.725	0.725	0.725	0.725	0.725	0.725	0.725	0.725
	Efficiency%	33.6	33.6	37.5	39.8	40.4	42.7	43.4	45.4	48.0	47.9	47.8	48.8
1150	Mech. Input HP	0.210	0.182	0.305	0.476	0.719	0.993	1.33	1.73	2.56	3.99	6.74	10.2
	Out.Torq., in.lbs.	5020	6420	12300	20500	31400	45300	62800	84300	133000	207000	350000	540000
	Therm. Input HP	0.151	0.179	0.290	0.446	0.687	0.945	1.29	1.66	2.56	3.58	5.97	8.57
	Output RPM	0.575	0.575	0.575	0.575	0.575	0.575	0.575	0.575	0.575	0.575	0.575	0.575
	Efficiency%	29.1	32.1	36.8	39.3	39.8	41.6	43.0	44.5	47.4	47.4	47.4	48.3
865	Mech. Input HP	0.159	0.135	0.235	0.367	0.559	0.766	1.03	1.34	1.97	3.10	5.25	7.95
	Out.Torq., in.lbs.	5040	6430	12400	20600	31500	45500	63200	84800	133000	209000	353000	547000
	Therm. Input HP	0.114	0.132	0.222	0.343	0.532	0.725	0.993	1.28	1.97	2.76	4.61	6.60
	Output RPM	0.432	0.432	0.432	0.432	0.432	0.432	0.432	0.432	0.432	0.432	0.432	0.432
	Efficiency %	29.0	32.8	36.2	38.4	38.7	40.8	42.0	43.4	46.3	46.2	46.2	47.2
575	Mech. Input HP	0.109	*0.161	0.255	0.390	0.531	0.720	0.936	1.35	2.14	3.64	5.52	
	Out.Torq., in.lbs.	5050	0.090	12400	20600	31700	45800	63600	85300	133000	211000	357000	554000
	Therm. Input HP	0.078	6450	0.152	0.237	0.370	0.500	0.689	0.887	1.35	1.89	3.16	4.53
	Output RPM	0.288	0.088	0.288	0.288	0.288	0.288	0.288	0.288	0.288	0.288	0.288	0.288
	Efficiency%	28.1	0.288	35.1	37.0	37.0	39.3	40.2	41.6	44.9	44.9	44.8	45.7
300	Mech. Input HP	0.0590	0.050	0.089	0.141	0.220	0.299	0.408	0.531	0.745	1.19	2.01	3.06
	Out.Torq., in.lbs.	5070	6460	12400	20700	31800	46000	63900	85900	133000	212000	360000	560000
	Therm. Input HP	0.042	0.049	0.083	0.131	0.208	0.280	0.388	0.500	0.745	1.04	1.73	2.48
	Output RPM	0.150	0.150	0.150	0.150	0.150	0.150	0.150	0.150	0.150	0.150	0.150	0.150
	Efficiency %	27.2	30.5	33.2	34.9	34.3	36.6	37.3	38.5	42.5	42.6	42.6	43.6

Ratings based on 1.0 service factor. For A.G.M.A. recommended practice on service factors, see page 11.

Horsepower and Torque Ratings • Double Worm

WORM SPEED (RPM)	Unit Size	35	40	50	60	70	80	90	100	120	140	170	200
	Center Distance	3.5	4	5	6	7	8	9	10	12	14	17	20
	Total Actual Ratio	2500	2500	2500	2500	2500	2500	2500	2500	2500	2500	2500	2500
	Ratio Combinations	50 50	50 50	50 50	50 50	50 50	50 50	50 50	50 50	50 50	50 50	50 50	50 50
1750	Mech. Input HP	0.210	0.236	0.393	0.608	0.902	1.23	1.68	2.14	3.21	4.82	8.12	12.3
	Out.Torq., in.lbs.	5020	6400	12300	20400	31300	45100	62500	83800	133000	206000	347000	535000
	Therm. Input HP	0.202	0.232	0.374	0.572	0.866	1.18	1.63	2.07	3.21	4.36	7.26	10.4
	Output RPM	0.700	0.700	0.700	0.700	0.700	0.700	0.700	0.700	0.700	0.700	0.700	0.700
	Efficiency%	26.5	30.2	34.7	37.3	38.5	40.6	41.4	43.4	46.0	47.4	47.4	48.5
1450	Mech. Input HP	0.176	0.198	0.328	0.510	0.760	1.04	1.40	1.81	2.70	4.21	7.13	10.8
	Out.Torq., in.lbs.	5030	6420	12300	20500	31400	45300	62800	84200	133000	207000	350000	540000
	Therm. Input HP	0.168	0.194	0.311	0.478	0.727	0.993	1.36	1.74	2.70	3.78	6.32	9.06
	Output RPM	0.580	0.580	0.580	0.580	0.580	0.580	0.580	0.580	0.580	0.580	0.580	0.580
	Efficiency%	26.4	29.9	34.6	37.0	38.0	39.9	41.1	42.8	45.3	45.3	45.1	46.1
1150	Mech. Input HP	0.139	0.154	0.264	0.414	0.613	0.847	1.13	1.48	2.16	3.39	5.73	8.70
	Out.Torq., in.lbs.	5040	6430	12400	20500	31500	45500	63100	84700	133000	208000	353000	546000
	Therm. Input HP	0.133	0.151	0.250	0.387	0.584	0.803	1.09	1.41	2.16	3.02	5.04	7.24
	Output RPM	0.460	0.460	0.460	0.460	0.460	0.460	0.460	0.460	0.460	0.460	0.460	0.460
	Efficiency%	26.4	30.4	34.2	36.2	37.5	39.2	40.7	41.9	44.9	45.0	44.9	45.8
865	Mech. Input HP	0.105	0.120	0.204	0.319	0.477	0.655	0.882	1.15	1.67	2.64	4.47	6.80
	Out.Torq., in.lbs.	5060	6440	12400	20600	31600	45600	63400	85100	133000	210000	356000	551000
	Therm. Input HP	0.1	0.117	0.192	0.297	0.453	0.618	0.846	1.09	1.67	2.34	3.90	5.60
	Output RPM	0.346	0.346	0.346	0.346	0.346	0.346	0.346	0.346	0.346	0.346	0.346	0.346
	Efficiency %	26.5	29.6	33.4	35.5	36.4	38.3	39.4	40.8	43.7	43.6	43.6	44.5
575	Mech. Input HP	0.071	0.080	0.141	0.222	0.332	0.456	0.614	0.904	1.16	1.84	3.12	4.76
	Out.Torq., in.lbs.	5070	6450	12400	20700	31700	45800	63700	85600	133000	211000	358000	556000
	Therm. Input HP	0.067	0.790	0.133	0.206	0.314	0.429	0.586	0.855	1.16	1.62	2.7	3.88
	Output RPM	0.230	0.230	0.230	0.230	0.230	0.230	0.230	0.230	0.230	0.230	0.230	0.230
	Efficiency%	26.0	29.1	32.1	31.5	34.9	36.7	37.9	34.5	41.8	41.9	41.9	42.7
300	Mech. Input HP	0.038	0.045	0.079	0.125	0.190	0.258	0.347	0.453	0.652	1.04	1.77	2.70
	Out.Torq., in.lbs.	5080	6470	12500	20700	31800	46000	64000	86000	133000	213000	361000	562000
	Therm. Input HP	0.036	0.044	0.074	0.116	0.179	0.242	0.330	0.426	0.652	0.914	1.52	2.18
	Output RPM	0.120	0.120	0.120	0.120	0.120	0.120	0.120	0.120	0.120	0.120	0.120	0.120
	Efficiency %	24.9	27.0	29.9	31.5	31.9	33.9	35.1	36.2	38.8	38.8	38.8	39.6

WORM SPEED (RPM)	Unit Size	35	40	50	60	70	80	90	100	120	140	170	200
	Center Distance	3.5	4	5	6	7	8	9	10	12	14	17	20
	Total Actual Ratio	3000	3000	3000	3000	3000	3000	3000	3000	3000	3000	3000	3000
	Ratio Combinations	50 60	50 60	50 60	50 60	50 60	50 60	50 60	50 60	50 60	50 60	50 60	50 60
1750	Mech. Input HP	0.182	0.194	0.325	0.500	0.733	1.01	1.39	1.78	2.70	4.16	7.08	10.6
	Out.Torq., in.lbs.	4730	5920	11100	18400	28200	41000	56800	76100	125000	193000	326000	487000
	Therm. Input HP	0.175	0.183	0.296	0.478	0.720	0.970	1.34	1.78	2.70	3.80	6.37	9.43
	Output RPM	0.583	0.583	0.583	0.583	0.583	0.583	0.583	0.583	0.583	0.583	0.583	0.583
	Efficiency%	24.0	28.3	31.6	34.1	35.6	37.4	37.8	39.6	42.8	42.9	42.6	42.7
1450	Mech. Input HP	0.154	0.162	0.271	0.418	0.611	0.855	1.16	1.49	2.27	3.51	5.97	8.93
	Out.Torq., in.lbs.	4740	5940	11100	18500	28300	41200	57100	76500	126000	194000	328000	492000
	Therm. Input HP	0.147	0.153	0.246	0.399	0.591	0.831	1.11	1.44	2.27	3.18	5.33	7.90
	Output RPM	0.483	0.483	0.483	0.483	0.483	0.483	0.483	0.483	0.483	0.483	0.483	0.483
	Efficiency%	23.7	28.1	31.5	33.8	35.6	36.9	37.9	39.5	42.5	42.4	42.2	42.2
1150	Mech. Input HP	0.122	0.131	0.216	0.338	0.493	0.691	0.929	1.19	1.85	2.84	4.86	7.26
	Out.Torq., in.lbs.	4750	5950	11100	18500	28400	41300	57300	76900	127000	196000	331000	496000
	Therm. Input HP	0.117	0.123	0.196	0.321	0.475	0.669	0.888	1.15	1.85	2.56	4.30	6.36
	Output RPM	0.383	0.383	0.383	0.383	0.383	0.383	0.383	0.383	0.383	0.383	0.383	0.383
	Efficiency%	23.6	27.7	31.3	33.4	35.1	36.4	37.5	39.2	41.7	41.8	41.4	41.6
865	Mech. Input HP	0.092	0.101	0.165	0.286	0.383	0.536	0.720	0.927	1.45	2.23	3.79	5.68
	Out.Torq., in.lbs.	4760	5960	11200	18600	28500	41500	57600	77200	128000	197000	334000	501000
	Therm. Input HP	0.088	0.094	0.149	0.271	0.368	0.517	0.685	0.889	1.45	1.99	3.33	4.93
	Output RPM	0.288	0.288	0.288	0.288	0.288	0.288	0.288	0.288	0.288	0.288	0.288	0.288
	Efficiency %	23.5	27.0	31.0	29.7	34.1	35.4	36.6	38.1	40.4	40.5	40.2	40.4
575	Mech. Input HP	0.0620	0.067	0.113	0.182	0.268	0.374	0.501	0.645	1.00	1.54	2.63	3.94
	Out.Torq., in.lbs.	4770	5970	11200	18600	28600	41600	57800	77600	128000	198000	336000	506000
	Therm. Input HP	0.0590	0.0630	0.102	0.172	0.257	0.359	0.475	0.616	1.00	1.37	2.29	3.39
	Output RPM	0.192	0.192	0.192	0.192	0.192	0.192	0.192	0.192	0.192	0.192	0.192	0.192
	Efficiency%	23.4	27.0	30.1	31.1	32.4	33.9	35.1	36.6	38.8	39.1	38.9	39.0
300	Mech. Input HP	0.0330	0.037	0.063	0.102	0.153	0.208	0.284	0.368	.566	0.875	1.49	2.24
	Out.Torq., in.lbs.	4780	5980	11200	18700	28700	41800	58100	78000	129000	199000	339000	510000
	Therm. Input HP	0.031	0.034	0.059	0.096	0.146	0.199	0.268	0.350	.566	0.772	1.29	1.91
	Output RPM	0.100	0.100	0.100	0.100	0.100	0.100	0.100	0.100	0.100	0.100	0.100	0.100
	Efficiency %	23.0	25.5	27.9	28.9	29.8	31.9	32.4	33.6	36.1	36.2	36.0	36.1

Ratings based on 1.0 service factor. For A.G.M.A. recommended practice on service factors, see page 11.

Horsepower and Torque Ratings • Double Worm

WORM SPEED (RPM)	Unit Size	35	40	50	60	70	80	90	100	120	140	170	200
	Center Distance	3.5	4	5	6	7	8	9	10	12	14	17	20
	Total Actual Ratio	3600	3600	3600	3600	3600	3600	3600	3600	3600	3600	3600	3600
	Ratio Combinations	60	60	60	60	60	60	60	60	60	60	60	60
		60	60	60	60	60	60	60	60	60	60	60	60
	Mech. Input HP	0.163	0.175	0.288	0.446	0.652	0.882	1.23	1.59	2.39	3.80	6.45	9.46
	Out.Torq., in.lbs.	4740	5940	11100	18500	28300	41100	57100	76500	122000	194000	328000	492000
1750	Therm. Input HP	0.156	0.165	0.262	0.425	0.631	0.857	1.18	1.54	2.39	3.44	5.76	8.37
	Output RPM	0.486	0.486	0.486	0.486	0.486	0.486	0.486	0.486	0.486	0.486	0.486	0.486
	Efficiency%	22.4	26.2	29.7	31.9	33.5	36.0	35.8	37.1	39.4	39.4	39.2	40.1
	Mech. Input HP	0.135	0.146	0.239	0.375	0.544	0.735	1.02	1.31	1.96	3.13	5.34	7.98
	Out.Torq., in.lbs.	4750	5950	11100	18500	28400	41300	57300	76800	122000	195000	330000	496000
1450	Therm. Input HP	0.129	0.138	0.217	0.357	0.525	0.712	0.976	1.26	1.96	2.82	4.73	7.00
	Output RPM	0.403	0.403	0.403	0.403	0.403	0.403	0.403	0.403	0.403	0.403	0.403	0.403
	Efficiency%	22.5	25.9	29.7	31.5	33.4	35.9	35.9	37.6	39.8	39.9	39.6	39.7
	Mech. Input HP	0.109	0.117	0.192	0.307	0.439	0.593	0.822	1.07	1.57	2.52	4.29	6.41
	Out.Torq., in.lbs.	4760	5960	11200	18600	28500	41400	57500	77100	122000	196000	333000	500000
1150	Therm. Input HP	0.104	0.110	0.174	0.291	0.422	0.573	0.783	1.03	1.57	2.26	3.78	5.58
	Output RPM	0.319	0.319	0.319	0.319	0.319	0.319	0.319	0.319	0.319	0.319	0.319	0.319
	Efficiency%	22.1	25.8	29.4	30.7	32.9	35.4	35.5	36.5	39.4	39.5	39.3	39.5
	Mech. Input HP	0.081	0.0900	0.147	0.239	0.338	0.458	62.9	0.817	1.22	1.98	3.37	5.06
	Out.Torq., in.lbs.	4770	5970	11200	18600	28600	41500	57700	77400	122000	198000	335000	503000
865	Therm. Input HP	0.077	0.084	0.133	0.226	0.324	0.441	0.597	0.782	1.22	1.76	2.95	4.37
	Output RPM	0.240	0.240	0.240	0.240	0.240	0.240	0.240	0.240	0.240	0.240	0.240	0.240
	Efficiency %	22.3	25.3	29.0	29.7	32.2	34.6	35.0	36.1	38.1	38.1	37.9	38.0
	Mech. Input HP	0.046	0.060	0.101	0.166	0.238	0.316	0.440	0.570	0.846	1.38	2.35	3.52
	Out.Torq., in.lbs.	4770	5970	11200	18600	28600	41700	57900	77700	122000	199000	337000	507000
575	Therm. Input HP	0.0440	0.056	0.091	0.157	0.228	0.303	0.416	0.543	0.846	1.22	2.04	3.02
	Output RPM	0.160	0.160	0.160	0.160	0.160	0.160	0.160	0.160	0.160	0.160	0.160	0.160
	Efficiency%	26.2	24.9	28.0	28.4	30.5	33.5	33.4	34.6	36.5	36.6	36.4	36.5
	Mech. Input HP	0.029	0.0330	0.056	0.094	0.135	0.178	0.248	0.323	0.473	0.774	1.32	1.98
	Out.Torq., in.lbs.	4780	5980	11200	18700	28700	41800	58100	78000	122000	200000	340000	511000
300	Therm. Input HP	0.028	0.030	0.050	0.088	0.129	0.170	0.234	0.307	0.473	0.682	1.14	1.69
	Output RPM	0.083	0.088	0.083	0.083	0.083	0.083	0.083	0.083	0.0833	0.0833	0.0833	0.0833
	Efficiency %	21.3	24.0	26.2	26.3	28.1	31.1	31.0	31.9	34.1	34.1	34.0	34.0

WORM SPEED (RPM)	Unit Size	35	40	50	60	70	80	90	100	120	140	170	200
	Center Distance	3.5	4	5	6	7	8	9	10	12	14	17	20
	Total Actual Ratio	4200	4200	4200	4200	4200	4200	4200	4200	4200	4200	4200	4200
	Ratio Combinations	70	70	70	70	70	70	70	70	70	70	70	70
		60	60	60	60	60	60	60	60	60	60	60	60
	Mech. Input HP	0.107	0.123	0.231	0.357	0.528	0.728	0.969	1.29	1.96	3.13	5.32	7.94
	Out.Torq., in.lbs.	4750	5940	11100	18500	28400	41200	57200	76700	122000	195000	330000	495000
1750	Therm. Input HP	0.102	0.116	0.210	0.340	0.510	0.706	0.927	1.25	1.96	2.82	4.72	6.98
	Output RPM	0.417	0.417	0.417	0.417	0.417	0.417	0.417	0.417	0.417	0.417	0.417	0.417
	Efficiency%	29.4	31.9	31.8	34.2	35.5	37.5	39.1	39.2	41.2	41.3	41.0	41.2
	Mech. Input HP	0.092	0.104	0.195	0.299	0.448	0.616	0.823	1.10	1.66	2.66	4.53	6.78
	Out.Torq., in.lbs.	4750	5950	11200	18500	28400	41400	57400	77000	122000	196000	332000	498000
1450	Therm. Input HP	0.088	0.097	0.177	0.284	0.431	5.95	0.785	1.06	1.66	2.39	4.00	5.92
	Output RPM	0.345	0.345	0.345	0.345	0.345	0.345	0.345	0.345	0.345	0.345	0.345	0.345
	Efficiency%	28.1	31.5	31.3	34.0	34.8	36.8	38.2	38.3	40.3	40.3	40.1	40.2
	Mech. Input HP	0.075	0.084	0.159	0.243	0.362	0.498	0.668	0.876	1.35	2.17	3.70	5.55
	Out.Torq., in.lbs.	4760	5960	11200	18600	28500	41500	57600	77300	122000	197000	334000	502000
1150	Therm. Input HP	0.071	0.079	0.144	0.230	0.348	0.480	0.635	0.840	1.35	1.94	3.25	4.81
	Output RPM	0.274	0.274	0.274	0.274	0.274	0.274	0.274	0.274	0.274	0.274	0.274	0.274
	Efficiency%	27.5	30.7	30.5	33.2	34.2	36.2	37.5	38.3	39.3	39.4	39.2	39.3
	Mech. Input HP	0.058	0.065	0.123	0.191	0.286	0.389	0.522	0.699	1.04	1.69	2.88	4.32
	Out.Torq., in.lbs.	4770	5970	11200	18600	28600	41600	57800	77600	122000	198000	336000	505000
865	Therm. Input HP	0.055	0.061	0.111	0.181	0.274	0.374	0.495	0.668	1.04	1.50	2.51	3.72
	Output RPM	0.206	0.206	0.206	0.206	0.206	0.206	0.206	0.206	0.206	0.206	0.206	0.206
	Efficiency %	26.7	29.7	29.7	31.8	32.7	35.0	36.2	36.2	38.3	38.3	38.1	38.2
	Mech. Input HP	0.0410	0.045	0.086	0.136	0.204	0.274	0.369	0.501	0.730	1.19	2.03	3.05
	Out.Torq., in.lbs.	4780	5980	11200	18600	28700	41700	58000	77800	122000	199000	338000	508000
575	Therm. Input HP	0.0390	0.0430	0.078	0.128	0.195	0.263	0.349	0.477	0.730	1.05	1.76	2.61
	Output RPM	0.137	0.137	0.137	0.137	0.137	0.137	0.137	0.137	0.137	0.137	0.137	0.137
	Efficiency%	25.3	28.3	28.1	29.9	30.5	33.0	34.1	33.7	36.3	36.4	36.2	36.2
	Mech. Input HP	0.023	0.026	0.049	0.078	0.118	0.157	0.215	0.289	0.425	0.694	1.18	1.78
	Out.Torq., in.lbs.	4780	5890	11200	18700	28700	41800	58100	78100	122000	200000	340000	511000
300	Therm. Input HP	0.022	0.024	0.044	0.073	0.113	0.150	0.203	0.274	0.425	0.611	1.02	1.51
	Output RPM	0.071	0.071	0.071	0.071	0.071	0.071	0.071	0.071	0.0714	0.0714	0.0714	0.0714
	Efficiency %	23.2	25.7	25.7	27.0	27.5	30.2	30.6	30.6	32.5	32.6	32.6	32.6

Ratings based on 1.0 service factor. For A.G.M.A. recommended practice on service factors, see page 11.

Horsepower and Torque Ratings • Double Worm

WORM SPEED (RPM)	Unit Size	35	40	50	60	70	80	90	100	120	140	170	200
	Center Distance	3.5	4	5	6	7	8	9	10	12	14	17	20
	Total Actual Ratio	4900	4900	4900	4900	4900	4900	4900	4900	4900	4900	4900	4900
	Ratio Combinations	70 70	70 70	70 70	70 70	70 70	70 70	70 70	70 70	70 70	70 70	70 70	70 70
1750	Mech. Input HP	0.096	0.118	0.216	0.314	0.482	0.667	0.875	1.12	1.77	2.68	4.52	6.90
	Out.Torq., in.lbs.	4340	5850	10900	17200	26900	38400	53500	71700	116000	176000	309000	472000
	Therm. Input HP	0.092	0.113	0.204	0.314	0.482	0.667	0.875	1.12	1.77	2.59	4.15	6.15
	Output RPM	0.357	0.357	0.357	0.357	0.357	0.357	0.357	0.357	0.357	0.357	0.357	0.357
	Efficiency%	25.5	28.1	28.6	31.0	31.6	32.6	34.6	36.3	37.1	37.2	38.8	38.8
1450	Mech. Input HP	0.081	0.101	0.182	0.264	0.405	0.560	0.739	0.957	1.48	2.26	3.96	6.04
	Out.Torq., in.lbs.	4340	5860	10900	17200	26900	38400	53500	71900	116000	177000	311000	475000
	Therm. Input HP	0.078	0.096	0.172	0.264	0.405	0.560	0.739	0.955	1.48	2.17	3.62	5.35
	Output RPM	0.296	0.296	0.296	0.296	0.296	0.296	0.296	0.296	0.296	0.296	0.296	0.296
	Efficiency%	24.9	27.3	28.1	30.6	31.2	32.2	34.0	35.3	36.8	36.8	36.8	37.0
1150	Mech. Input HP	0.066	0.081	0.148	0.214	0.328	0.458	0.603	0.778	1.20	1.84	3.24	4.95
	Out.Torq., in.lbs.	4350	5870	10900	17200	26900	38400	53500	72200	116000	178000	313000	479000
	Therm. Input HP	0.063	0.077	0.139	0.214	0.328	0.458	0.603	0.774	1.20	1.76	2.94	4.35
	Output RPM	0.235	0.235	0.235	0.235	0.235	0.235	0.235	0.235	0.235	0.235	0.235	0.235
	Efficiency%	24.4	26.9	27.6	29.9	30.5	31.2	33.0	34.5	36.0	36.0	36.0	36.0
865	Mech. Input HP	0.066	0.063	0.126	0.167	0.259	0.356	0.471	0.608	0.934	1.44	2.53	3.87
	Out.Torq., in.lbs.	4360	5880	11000	17200	26900	38400	53600	72400	116000	179000	315000	482000
	Therm. Input HP	0.049	0.060	0.118	0.167	0.259	0.356	0.470	0.603	0.934	1.37	2.28	3.38
	Output RPM	0.176	0.176	0.176	0.176	0.176	0.176	0.176	0.176	0.176	0.176	0.176	0.176
	Efficiency %	16.3	25.9	24.4	28.8	29.1	30.2	31.9	33.4	34.8	34.8	34.9	34.9
575	Mech. Input HP	0.036	0.044	0.080	0.118	0.186	0.253	0.336	0.432	0.655	1.01	1.78	2.72
	Out.Torq., in.lbs.	4360	5890	11000	17200	26900	38400	53800	72700	116000	180000	317000	485000
	Therm. Input HP	0.034	0.042	0.075	0.118	0.186	0.253	0.334	0.427	0.655	0.960	1.60	2.36
	Output RPM	0.117	0.117	0.117	0.117	0.117	0.117	0.117	0.117	0.117	0.117	0.117	0.117
	Efficiency%	22.4	24.6	25.4	27.1	26.9	28.3	29.8	31.3	33.0	:33.0	33.0	33.2
300	Mech. Input HP	0.020	0.025	0.045	0.068	0.108	0.144	0.195	0.249	0.382	0.610	1.08	1.65
	Out.Torq., in.lbs.	4370	5900	11000	17200	26900	38500	54000	73000	116000	180000	319000	488000
	Therm. Input HP	0.019	0.024	0.430	0.068	0.108	0.144	0.193	0.245	0.382	0.575	0.960	1.42
	Output RPM	0.612	0.061	0.061	0.061	0.061	0.061	0.061	0.061	0.0612	0.0612	0.0612	0.0612
	Efficiency %	20.5	22.5	23.3	24.5	24.2	25.9	26.9	28.5	29.5	28.7	28.7	28.8

Ratings based on 1.0 service factor. For A.G.M.A. recommended practice on service factors, see page 11.

Dimensions Type DE • Horizontal and Vertical

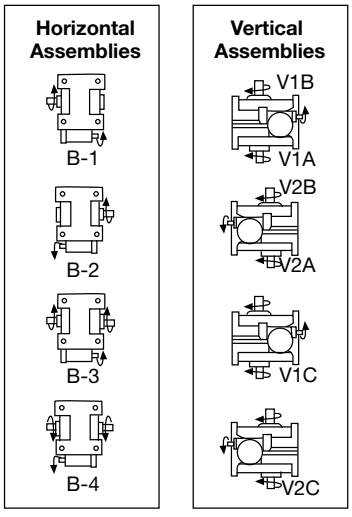

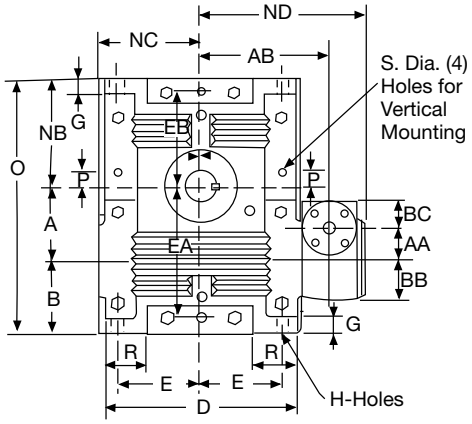

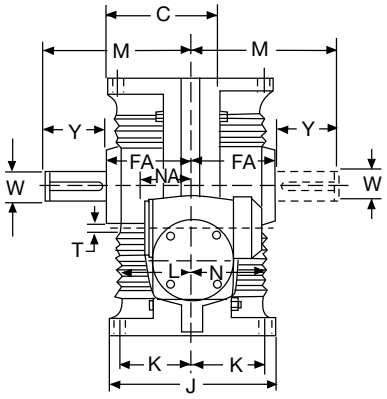

Unit Size	WT. LBS.	A	AA	AB	B	BB	BC	C	D	E	EA	EB	FA	G	H	J	K	L	M	N	NA	NB	NC	ND	O	P	Q	R	S	T▲	U	Keyway	W▲	Y	Keyway
DE35	120	3 1/2	2	6 5/8	3 3/8	2 1/2	1 11/16	5 5/16	9	3 7/8	6 3/8	4 7/8	4 1/8	7/8	11/16	8 1/4	3 3/8	4 1/2	7 1/8	4 9/16	3 1/8	5 3/8	4 3/4	8 7/8	12 1/4	1 1/4	3 7/8	2	9/16	11/16	1 5/16	3/16 x 3/32 x 1 1/4	1 1/2	3	3/8 x 3/16 x 2 15/16
DE40	180	4	2	7 3/8	4 1/4	2 1/2	1 11/16	6 5/16	10 1/4	4 1/4	7 1/2	5 1/4	5	7/8	13/16	10	4	4 1/2	8 1/2	4 9/16	3 1/8	6	5 1/2	9 5/8	14 1/4	1 3/4	4 1/4	2 3/8	11/16	11/16	1 5/16	3/16 x 3/32 x 1 1/4	1 3/4	3 1/2	3/8 x 3/16 x 3 7/16

All dimensions are in inches. Use certified prints for construction. The input shaft may be rotated in either direction. Standard gear sets are cut with right hand threads giving relative shaft rotations as shown above. Shaft arrangements are shown above. Desired assembly should be specified when ordering. Standard keys are furnished with units.

▲ Tolerances: 1 1/2" Diameter or Less = +.0000" -.0005"
Over 1 1/2" Diameter = +.000" -.001"

Low input speeds require special order instructions. See introductory section.

Dimensions Type DE • Horizontal

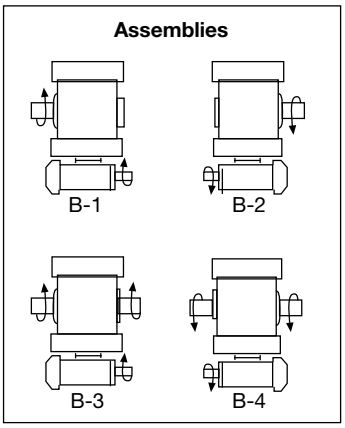

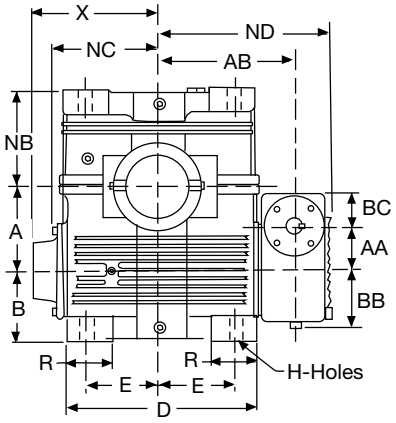

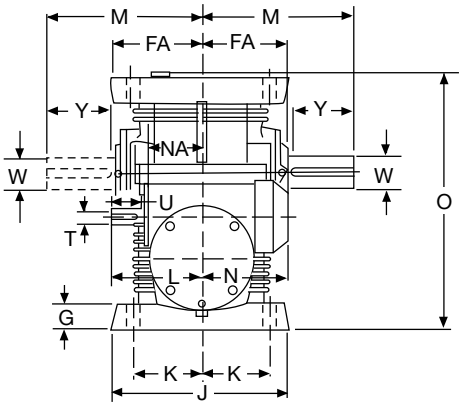

Unit Size	WT LBS	A	AA	AB	B	BB	BC	D	E	FA	G	H	J	K	L	M	N	NA	NB	NC	ND	O	R	T▲	U	Keyway	W▲	Y	Keyway	X
DE50	210	5	2 1/2	7 7/8	4 5/8	3 5/8	1 7/8	11 3/8	4 3/4	5 1/2	1 1/2	13/16	10 3/4	4 3/8	5 3/8	9 5/8	5 1/16	3 5/8	5 3/4	6 7/16	10 3/16	15 7/8	2	11/16	1 3/4	3/16 x 3/32 x 1 11/16	2	4	1/2 x 1/4 x 3 7/8	8 3/16
DE60	335	6	3	9 1/2	5	4 3/8	2 5/16	13 1/2	5 1/4	6 1/8	1 11/16	15/16	12 1/4	4 3/4	6 1/8	10 3/4	5 7/8	4 3/16	6 3/4	7 3/4	12 1/4	18 1/2	3	7/8	1 7/8	3/16 x 3/32 x 1 13/16	2 1/4	4 1/2	1/2 x 1/4 x 4 3/8	9 9/16
DE70	435	7	3 1/2	10 3/8	5 3/8	4 3/4	2 1/2	14 3/4	6	6 3/8	1 11/16	1 1/16	13	5	7	11 1/2	6 9/16	5	7 3/4	8 3/8	13 1/4	20 5/8	2 3/4	1	2	1/4 x 1/8 x 1 15/16	2 1/2	5	5/8 x 5/16 x 4 15/16	10 3/16
DE80	625	8	4	11 5/8	5 3/4	5 1/8	2 7/8	16 1/2	6 3/4	6 1/2	1 3/4	1 3/16	13 1/2	5 3/8	7 3/4	12 1/8	8	5 11/16	8 3/4	9 3/8	14 15/16	23	3	1 1/8	2 1/16	1/4 x 1/8 x 2	2 3/4	5 1/2	5/8 x 5/16 x 5 7/16	11 9/16
DE90	855	9	5	13 1/8	6 1/4	6 1/8	3 3/8	18 3/4	7 3/4	7 5/8	1 7/8	1 7/16	15 1/4	6	8 3/4	14 1/4	8 9/16	6 7/16	9 3/4	10 3/8	16 13/16	25 1/2	3 1/4	1 3/8	2 5/16	5/16 x 5/32 x 2 1/4	3 1/4	6 1/2	3/4 x 3/8 x 6 3/8	13 3/8
DE100	1110	10	5	14 1/14	6 3/4	6 1/8	3 3/8	21	8 3/4	8 5/8	2	1 7/16	17	6 3/8	8 3/4	16	8 9/16	6 7/16	10 3/4	11 11/16	17 15/16	27 7/8	3 1/2	1 3/8	2 5/16	5/16 x 5/32 x 2 1/4	3 5/8	7 1/4	7/8 x 7/16 x 7 3/16	14 3/8
DE120	1530	12	6	16 3/8	7 1/2	7 1/4	3 7/8	24 5/8	10 1/2	8 7/8	2 1/8	1 9/16	18 1/2	7 1/8	10 1/4	17 1/2	10 1/16	7 3/4	13 1/4	13 7/16	20 5/8	33	4	1 1/2	2 11/16	3/8 x 3/16 x 2 5/8	4 1/4	8 1/2	1 x 1/2 x 8 3/8	16 1/8
DE140	2360	14	6	19 3/8	9 1/2	7 1/4	3 7/8	27 1/2	11 1/2	10 1/8	2 1/4	1 11/16	21 3/4	8 3/4	10 1/4	19 1/4	10 1/16	7 3/4	15 3/8	15 1/2	23 5/8	39	4 1/2	1 1/2	2 11/16	3/8 x 3/16 x 2 5/8	5	9	1 1/4 x 5/8 x 8 5/8	–

Dimensions Type DEB • Horizontal

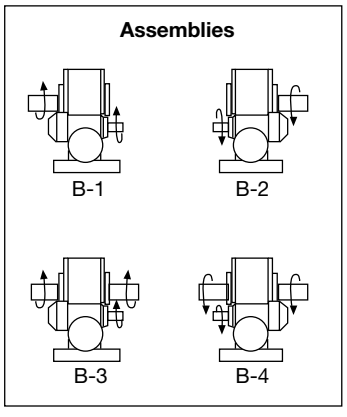

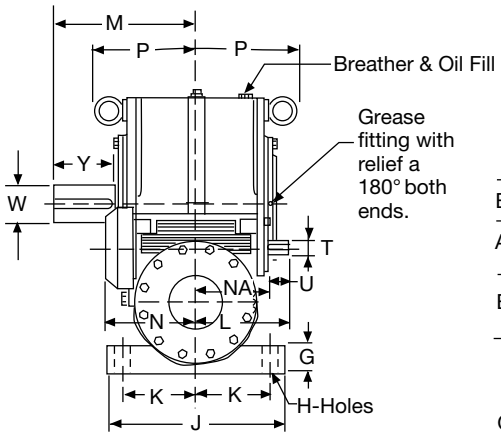

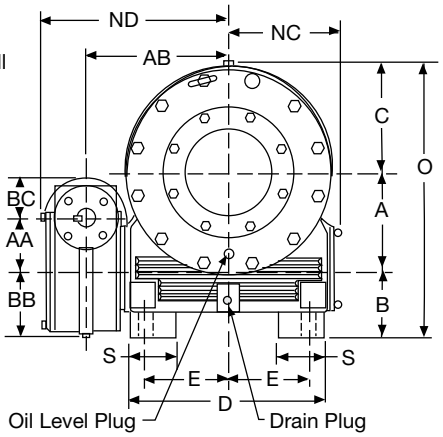

Unit Size	WT. LBS.	A	AA	AB	B	BB	BC	C	D	E	G	H	J	K	L	M	N	NA	NC	ND	O	P	S	T▲	U	Keyway	W▲	Y	Keyway
DEB170	4325	17	8	22 3/8	10 1/2	9 1/4	5 3/16	18 1/2	32	13 1/4	3 3/8	1 11/16	24	10 1/4	12 1/2	21 1/2	11 3/4	9 3/8	18 11/16	28 1/8	45 3/4	13 1/4	5 3/4	1 7/8	3 1/8	1/2 x 1/4 x 3 1/16	5 3/4	10	1 1/2 x 3/4 x 9 3/4
DEB200	5960	20	9	25 3/8	11 1/2	10 1/4	6 3/16	21 7/16	36	14 3/4	3 5/8	1 15/16	27	11 1/2	14 1/4	23 3/4	13 13/16	10 3/8	21 3/16	32	52 3/4	14 1/2	6 1/2	2 1/8	3 15/16	1/2 x 1/4 x 3 7/8	6 1/2	11	1 1/2 x 3/4 x 10 1/2

All dimensions are in inches. Use certified prints for construction. The input shaft may be rotated in either direction. Standard gear sets are cut with right hand threads giving relative shaft rotations as shown above. Shaft arrangements are shown above. Desired assembly should be specified when ordering. Standard keys are furnished with units.

▲ Tolerances: 1 1/2" Diameter or Less = +.0000" -.0005"
Over 1 1/2" Diameter = +.000" -.001"

Low input speeds require special order instructions. See introductory section.

Dimensions Type DV • Vertical

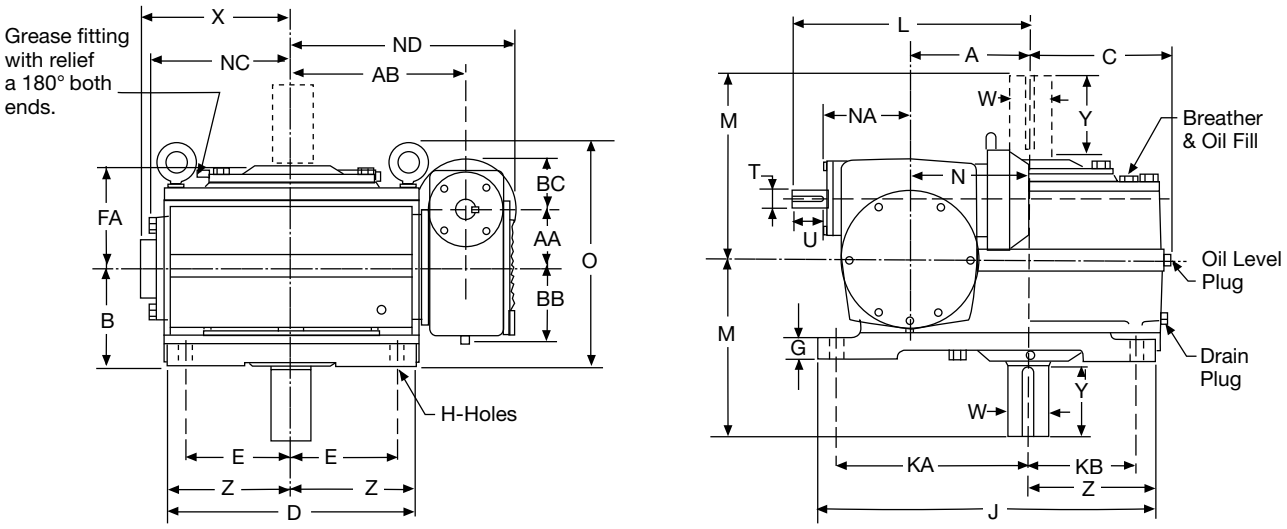

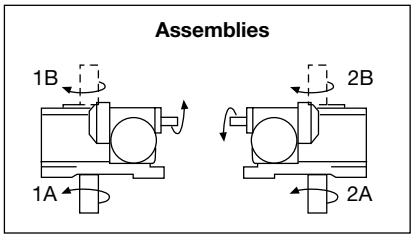

A drywell is standard for vertical assemblies sizes 30-200 only.

Unit Size	WT. LBS.	A	AA	AB	B	BB	BC	C	D	E	FA	G	H	J	KA	KB	L	M	N	NA	NC	ND	O	T▲	U	Keyway	W▲	Y	Keyway	Z	X
DV35	90	3 1/2	2	6 5/8	4 1/8	2 1/2	2 1/8	4 13/16	8 3/8	3 1/2	4	7/8	11/16	11 3/4	6 7/8	3 1/2	8	7 1/8	4 9/16	3 1/8	5	8 7/8	9 1/8	11/16	1 5/16	3/16 x 3/32 x 1 1/4	1 1/2	3	3/8 x 3/16 x 2 15/16	4 3/16	6 5/8
DV40	125	4	2	7 3/8	5	2 1/2	2 1/8	5 3/8	9 1/4	3 7/8	4 7/8	1 1/8	11/16	13 1/8	7 5/8	3 7/8	8 1/2	8 1/2	4 9/16	3 1/8	5 11/16	9 5/8	10 1/2	11/16	1 5/16	3/16 x 3/32 x 1 1/4	1 3/4	3 1/2	3/8 x 3/16 x 3 7/16	4 5/8	7 1/2
DV50	285	5	2 1/2	7 7/8	5 5/8	3 5/8	2 1/8	6 5/8	11 1/8	4 3/4	5 1/2	1 1/4	13/16	15 3/8	9	4 3/4	10 3/8	9 5/8	5 1/16	3 5/8	6 7/16	10 3/16	12 9/16	11/16	1 3/4	3/16 x 3/62 x 1 11/16	2	4	1/2 x 1/4 x 3 7/8	5 9/16	8 3/16
DV60	400	6	3	9 1/2	6 1/4	4 3/8	2 9/16	7 3/4	13 3/8	5 3/4	6 1/8	1 3/8	13/16	18 1/8	10 1/2	5 3/4	12 1/8	10 3/4	5 7/8	4 3/16	7 3/4	12 1/4	13 7/16	7/8	1 7/8	3/16 x 3/62 x 1 13/16	2 1/4	4 1/2	1/2 x 1/4 x 4 3/8	6 11/16	9 9/16
DV70	550	7	3 1/2	10 3/8	6 1/2	4 3/4	2 9/16	8 3/8	14 5/8	6 1/4	6 7/16	1 3/8	15/16	20 1/8	11 3/4	6 1/4	14	11 1/2	6 9/16	5	8 3/8	13 1/4	14	1	2	1/4 x 1/8 x 1 15/16	2 1/2	5	5/8 x 5/16 x 4 15/16	7 5/16	10 3/16
DV80	690	8	4	11 5/8	6 5/8	5 1/8	3 5/16	9 1/2	16 1/2	7	6 1/2	1 1/2	1 1/16	22 1/4	12 3/4	7	15 3/4	12 1/8	8	5 11/16	9 3/8	14 15/16	14 7/8	1 1/8	2 1/16	1/4 x 1/8 x 2	2 3/4	5 1/2	5/8 x 5/16 x 5 7/16	8 1/4	11 9/16
DV90	890	9	5	13 1/8	7 3/4	6 1/8	3 11/16	10 1/2	18 1/2	7 7/8	7 5/8	1 5/8	1 3/16	25	14 3/8	7 7/8	17 3/4	14 1/4	8 9/16	6 7/16	10 3/8	16 13/16	17	1 3/8	2 5/16	5/16 x 5/32 x 2 1/4	3 1/4	6 1/2	3/4 x 3/8 x 6 3/8	9 1/4	13 3/8
DV100	1090	10	5	14 1/4	8 3/4	6 1/8	3 11/16	11 5/8	20 3/4	9	8 5/8	1 3/4	1 3/16	27 1/4	15 1/2	9	18 3/4	16	8 9/16	6 7/16	11 11/16	17 15/16	18 1/2	1 3/8	2 5/16	5/16 x 5/32 x 2 1/4	3 5/8	7 1/4	7/8 x 7/16 x 7 3/16	10 3/8	14 3/8
DV120	1760	12	6	16 3/8	9	7 1/4	4 1/8	13 5/8	24 1/4	10 3/8	8 7/8	2 1/8	1 5/16	32 3/8	18 1/2	10 3/8	22 1/4	17 1/2	10 1/16	7 3/4	13 7/16	20 5/8	19 1/2	1 1/2	2 11/16	3/8 x 3/16 x 2 5/8	4 1/4	8 1/2	1 x 1/2 x 8 3/8	12 1/8	16 1/8
DV140	2510	14	6	19 3/8	10 1/4	7 1/4	4 1/8	15 5/8	27 1/2	12	9 7/8	2 1/4	1 5/16	37 1/2	22	12	24 1/4	19 1/4	10 1/16	7 3/4	16	23 5/8	21 3/4	1 1/2	2 11/16	3/8 x 3/16 x 2 5/8	5	9	1 1/4 x 5/8 x 8 5/8	13 3/4	–
DV170	4160	17	8	22 3/8	11 1/2	9 1/4	5 3/16	18 1/2	33	14 1/2	11 1/8	2 1/2	1 9/16	44 3/4	26 1/4	14 1/2	29 1/2	21 1/2	11 3/4	9 3/8	18 11/16	28 1/8	24 3/4	1 7/8	3 1/8	1/2 x 1/4 x 3 1/16	5 3/4	10	1 1/2 x 3/4 x 9 3/4	16 1/2	–
DV200	5630	20	9	25 3/8	12 3/4	10 1/4	6 3/16	21 7/16	39	17	12 7/8	2 3/4	1 9/16	53	31	17	34 1/4	23 3/4	13 13/16	10 3/8	21 3/16	32	27 1/4	2 1/8	3 15/16	1/2 x 1/4 x 3 7/8	6 1/2	11	1 1/2 x 3/4 x 10 1/2	19 1/2	–

Dimensions Type DSM • Horizontal and Vertical

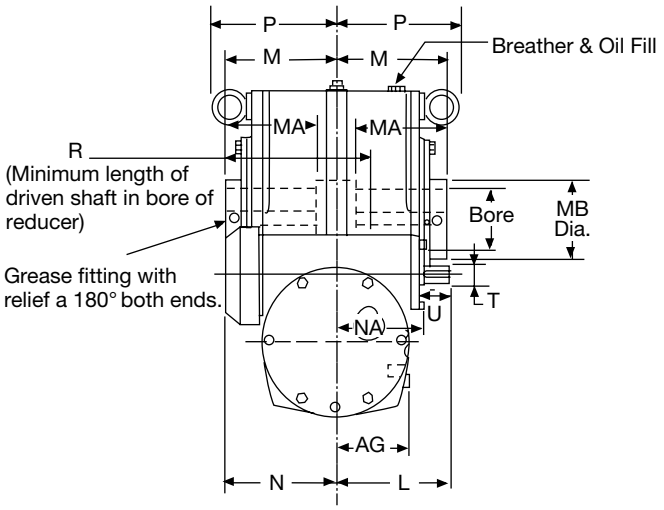

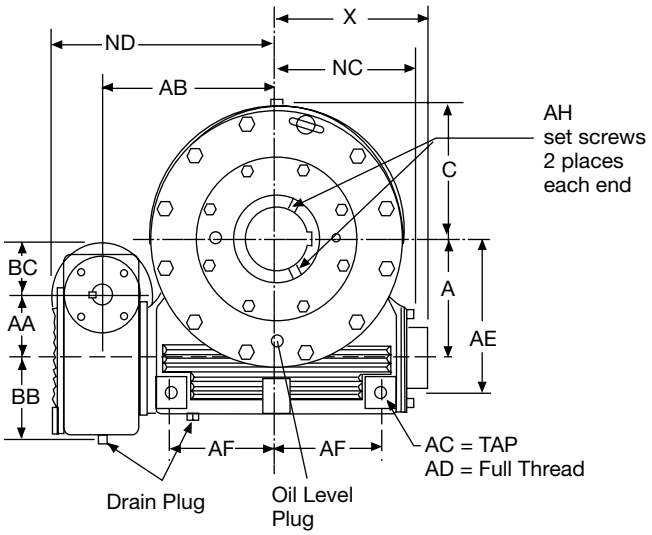

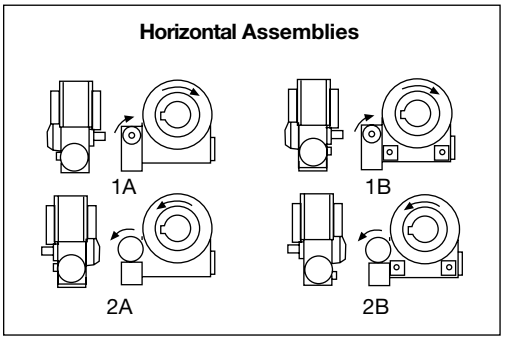

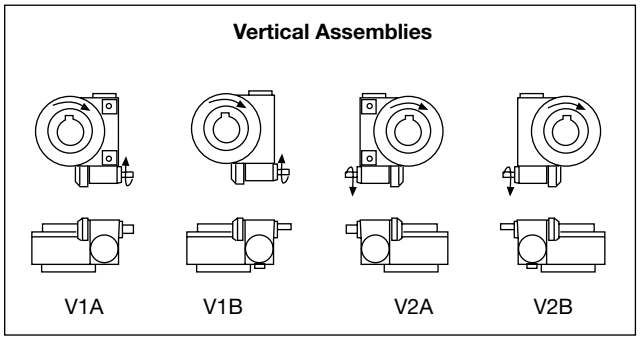

A drywell is standard for vertical assemblies sizes 60-200 only.

Unit Size	WT. LBS.	A	AA	AB	AC	AD	AE	AF	AG	AH	BB	BC	C	L	M	MA	MB	N	NA	NC	ND	P	R	T▲	U	Keyway	Bore	Keyway	X
DSM35	115	3 1/2	2	6 5/8	1/2-13	3/4	5 1/8	3 1/2	3	3/8-16	2 1/2	2 1/8	4 13/16	4 1/2	4 11/16	4 1/8	3 1/8	4 9/16	3 1/8	5	8 7/8	5	5 3/4	11/16	1 5/16	3/16 x 3/32 x 1 1/4	2.1885 / 2.1905	1/2 x 1/4	6 5/8
DSM40	165	4	2	7 3/8	5/8-11	1	5 3/4	3 7/8	3 1/2	3/8-16	2 1/2	2 1/8	5 3/8	4 1/2	5 5/16	4 1/16	3/2	4 9/16	3 1/8	5 11/16	9 5/8	5 1/2	6 7/16	11/16	1 5/16	3/16 x 3/32 x 1 1/4	2.438 / 2.440	5/8 x 5/16	7 1/2
DSM50	260	5	2 1/2	7 7/8	3/4-10	1 1/4	7	4 3/4	4	1/2-13	3 5/8	2 1/8	6 5/8	5 3/8	5 7/8	5 1/4	4 3/16	5 1/16	3 5/8	6 7/16	10 3/16	6 15/16	7	11/16	1 3/4	3/16 x 3/32 x 1 11/16	2.938 / 2.940	3/4 x 3/8	8 3/16
DSM60	360	6	3	9 1/2	3/4-10	1 1/8	8/12	5 3/4	4 1/4	1/2-13	4 3/8	2 9/16	7 3/4	6 1/8	6 1/2	5 3/4	4 3/4	5 7/8	4 3/16	7 3/4	12 1/4	7 3/16	7 3/4	7/8	1 7/8	3/16 x 3/32 x 1 13/16	3.438 / 3.440	7/8 x 7/16	9 9/16
DSM70	500	7	3 1/2	10 3/8	7/8-9	1 3/8	9 3/8	6 1/4	4 1/2	1/2-13	4 3/4	2 9/16	8 3/8	7	6 3/4	5 7/8	5 1/2	6 9/16	5	8 3/8	13 1/4	7 1/2	8 1/8	1	2	1/4 x 1/8 x 1 15/16	3.938 / 3.940	1 x 1/2	10 3/16
DSM80	645	8	4	11 5/8	1-8	1 1/2	10 1/4	7	4 5/8	1/2-13	5 1/8	3 5/16	9 1/2	7 3/4	7 1/4	6 1/4	6 1/4	8	5 11/16	9 3/8	14 15/16	8 1/4	8 3/4	1 1/8	2 1/16	1/4 x 1/8 x 2	4.438 / 4.440	1 x 1/2	11 9/16
DSM90	840	9	5	13 1/8	1-8	1 1/2	11 1/2	7 7/8	5 5/8	1/2-13	6 1/8	3 11/16	10 1/2	8 3/4	8 1/4	7 1/8	7	8 9/16	6 7/16	10 3/8	16 13/16	9 1/4	9 7/8	1 3/8	2 5/16	5/16 x 5/32 x 2 1/4	4.938 / 4.940	1 1/4 x 7/16	13 3/8
DSM100	1060	10	5	14 1/4	1-8	1 1/2	12 3/4	9	6 1/8	5/8-11	6 1/8	3 11/16	11 5/8	8 3/4	9 1/4	8	7 1/2	8 9/16	6 7/16	11 11/16	17 15/16	9 3/4	11	1 3/8	2 5/16	5/16 x 5/32 x 2 1/4	5.438 / 5.440	1 1/4 x 7/16	14 3/8
DSM120	1460	12	6	16 3/8	1 1/4-7	2	15 1/4	10 3/8	6 1/2	5/8-11	7 1/4	4 1/8	13 5/8	10 1/4	9 3/4	8 3/8	8	10 1/16	7 3/4	13 7/16	20 5/8	10 1/2	11 5/8	1 1/2	2 11/16	3/8 x 3/16 x 2 5/8	6.000 / 6.002	1 1/2 x 1/2	16 1/8
DSM140	2060	14	6	19 3/8	1 1/4-7	2 1/8	18 1/2	12	7 1/2	5/8-11	7 1/4	4 1/8	15 5/8	10 1/4	10 3/4	9	8	10 1/16	7 3/4	16	23 5/8	11 1/2	13	1 1/2	2 11/16	3/8 x 3/16 x 2 5/8	6.000 / 6.002	1 1/2 x 1/2	–
DSM170	3275	17	8	22 3/8	1 1/2-6	2 1/4	22	14 1/2	8 1/2	5/8-11	9 1/4	5 3/16	18 1/2	12 1/2	12 1/4	10 1/4	9 1/4	11 3/4	9 3/8	18 11/16	28 1/8	13 1/4	14 3/4	1 7/8	3 1/8	1/2 x 1/4 x 3 1/16	6.500 / 6.502	1 1/2 x 1/2	–
DSM200	4760	20	9	25 3/8	1 1/2-6	2 1/4	26	16 1/4	9 1/2	5/8-11	10 1/4	6 3/16	21 7/16	14 1/4	13 1/2	11 1/2	9 1/4	13 13/16	10 3/8	21 3/16	32	14 1/2	16	2 1/8	3 15/16	1/2 x 1/4 x 3 7/8	6.500 / 6.502	1 1/2 x 1/2	–

All dimensions are in inches. Use certified prints for construction. The input shaft may be rotated in either direction. Standard gear sets are cut with right hand threads giving relative shaft rotations as shown above. Shaft arrangements are shown above. Desired assembly should be specified when ordering. Standard keys are furnished with units.

▲ Tolerances: 1 1/2" Diameter or Less = +.0000" -.0005"
Over 1 1/2" Diameter = +.000" -.001"
Low input speeds require special order instructions. See introductory section.
A drywell is standard for vertical assemblies 60-200 only.

Dimensions Type DSMB • Base Mount

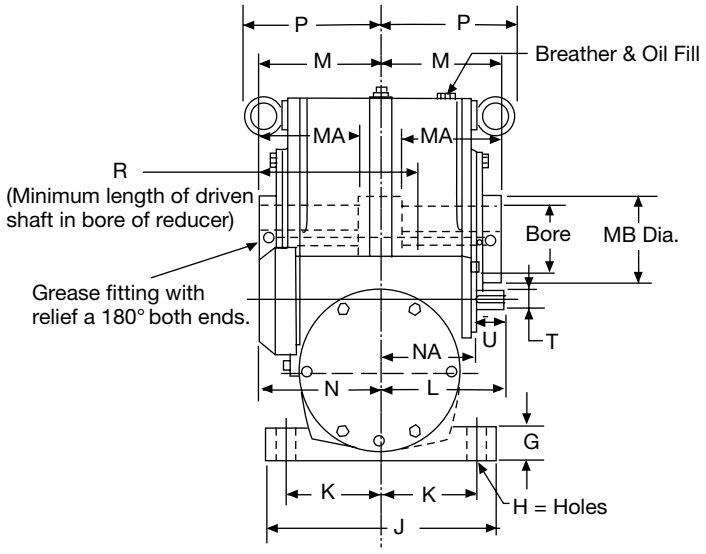

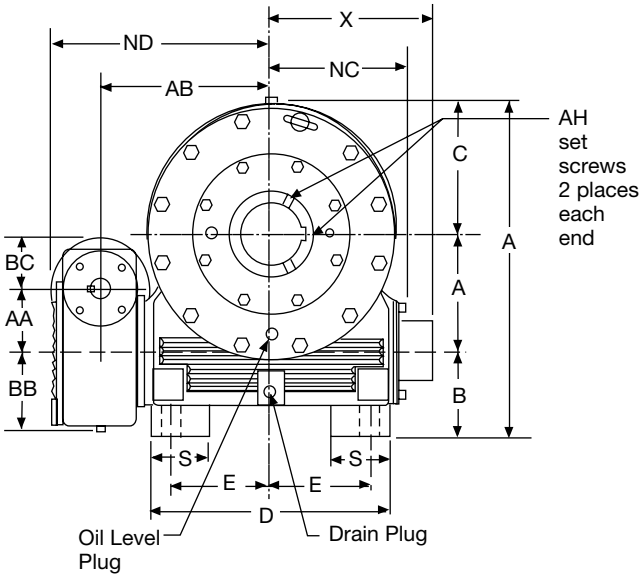

Assemblies

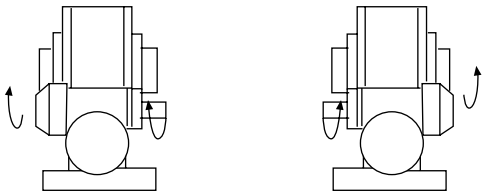

B-1 B-2

Unit Size	WT. LBS.	A	AA	AB	AH	B	BB	BC	C	D	E	G	H	J	K	L	M	MA	MB	N	NA	NC	ND	O	P	R	S	T▲	U	Keyway	Bore	Keyway	X
DSMB35	142	3 1/2	2	6 5/8	3/8-16	3 3/8	2 1/2	2 1/8	4 13/16	9 1/4	3 7/8	1 1/8	11/16	9	3 3/4	4 1/2	4 11/16	4 1/8	3 1/8	4 9/16	3 1/8	5	8 7/8	11 11/16	5	5 3/4	2 1/4	11/16	1 5/16	3/16 x 3/32 x 1 1/4	2.1885 / 2.1905	1/2 x 1/4	6 5/8
DSMB40	215	4	2	7 3/8	3/8-16	4	2 1/2	2 1/8	5 3/8	10 3/8	4 1/4	1 1/2	13/16	10 1/2	4 3/8	4 1/2	5 5/16	4 11/16	3 1/2	4 9/16	3 1/8	5 11/16	9 5/8	13 3/8	5 1/2	6 7/16	2 1/2	11/16	1 5/16	3/16 x 3/32 x 1 1/4	2.438 / 2.440	5/8 x 5/16	7 1/2
DSMB50	320	5	2 1/2	7 7/8	1/2-13	4 5/8	3 5/8	2 1/8	7 1/2	11 1/2	4 3/4	1 3/4	13/16	12	4 7/8	5 3/8	5 7/8	5 1/4	4 3/16	5 1/16	3 5/8	6 7/16	10 3/16	17 1/8	6 15/16	7	3	11/16	1 3/4	3/16 x 3/32 x 1 11/16	2.938 / 2.940	3/4 x 3/8	8 3/16
DSMB60	455	6	3	9 1/2	1/2-13	5	4 3/8	2 9/16	8 5/8	13 1/4	5 1/4	1 1/2	15/16	13	5 1/4	6 1/8	6 1/2	5 3/4	4 3/4	5 7/8	4 3/16	7 3/4	12 1/4	19 5/8	7 3/16	7 3/4	3	7/8	1 7/8	3/16 x 3/32 x 1 13/16	3.438 / 3.440	7/8 x 7/16	9 9/16
DSMB70	615	7	3 1/2	10 3/8	1/2-13	5 3/8	4 3/4	2 9/16	9 1/4	14 3/4	6	2	1 1/16	14	5 5/8	7	6 3/4	5 7/8	5 1/2	6 9/16	5	8 3/8	13 1/4	21 5/8	7 1/2	8 1/8	3 1/2	1	2	1/4 x 1/8 x 1 15/16	3.938 / 3.940	1 1/2 x 1/2	10 3/16
DSMB80	775	8	4	11 5/8	1/2-13	5 3/4	5 1/8	3 5/16	10 1/2	16 1/2	6 3/4	2 1/4	1 3/16	14 1/2	6	7 3/4	7 1/4	6 1/4	6 1/4	8	5 11/16	9 3/8	14 15/16	24 1/4	8 1/4	8 3/4	4	1 1/8	2 1/16	1/4 x 1/8 x 2	4.438 / 4.440	1 x 1/2	11 9/16
DSMB90	1005	9	5	13 1/8	1/2-13	6 1/4	6 1/8	3 11/16	11 3/8	18 3/4	7 3/4	2 1/2	1 7/16	17 1/2	7 1/4	8 3/4	8 1/4	7 1/8	7	8 9/16	6 7/16	10 3/8	16 13/16	26 5/8	9 1/4	9 7/8	4	1 3/8	2 5/16	5/16 x 5/32 x 2 1/4	4.938 / 4.940	1 1/4 x 7/16	13 3/8
DSMB100	1255	10	5	14 1/4	5/8-11	6 3/4	6 1/8	3 11/16	12 5/8	21	8 3/4	2 7/8	1 7/16	18	7 1/2	8 3/4	9 1/4	8	7 1/2	8 9/16	6 7/16	11 11/16	17 15/16	29 3/8	9 3/4	11	4 1/4	1 3/8	2 5/16	5/16 x 5/32 x 2 1/4	5.438 / 5.440	1 1/4 x 7/16	14 3/8
DSMB120	1930	12	6	16 3/8	5/8-11	7 1/2	7 1/4	4 1/8	14 5/8	24 1/2	10 1/2	2 3/4	1 9/16	21	9	10 1/4	9 3/4	8 3/8	8	10 1/16	7 3/4	13 7/16	20 5/8	34 1/8	10 1/2	11 5/8	4 1/2	1 1/2	2 11/16	3/8 x 3/16 x 2 5/8	6.000 / 6.002	1 1/2 x 1/2	16 1/8
DSMB140	2745	14	6	19 3/8	5/8-11	9 1/2	7 1/4	4 1/8	16 5/8	27 1/2	11 1/2	3	1 11/16	21 3/4	9 1/4	10 1/4	10 3/4	9	8	10 1/16	7 3/4	16	23 5/8	40 1/8	11 1/2	13	5	1 1/2	2 11/16	3/8 x 3/16 x 2 5/8	6.000 / 6.002	1 1/2 x 1/2	–
DSMB170	4085	17	8	22 3/8	5/8-11	10 1/2	9 1/4	5 3/16	19 1/2	32	13 1/4	3 3/8	1 11/16	24	10 1/4	12 1/2	12 1/4	10 1/4	9 1/4	11 3/4	9 3/8	18 11/16	28 1/8	47	13 1/4	14 3/4	5 3/4	1 7/8	3 1/8	1/2 x 1/4 x 3 1/16	6.500 / 6.502	1 1/2 x 1/2	–
DSMB200	5620	20	9	25 3/8	5/8-11	11 1/2	10 1/4	6 3/16	22 1/2	36	14 3/4	3 5/8	1 15/16	27	11 1/2	14 1/4	13 1/2	11 1/2	9 1/4	13 13/16	10 3/8	21 3/16	32	54	14 1/2	16	6 1/2	2 1/8	3 15/16	1/2 x 1/4 x 3 7/8	6.500 / 6.502	1 1/2 x 1/2	–

All dimensions are in inches. Use certified prints for construction. The input shaft may be rotated in either direction. Standard gear sets are cut with right hand threads giving relative shaft rotations as shown above. Shaft arrangements are shown above. Desired assembly should be specified when ordering. Standard keys are furnished with units.

▲ Tolerances: 1½" Diameter or Less = +.0000" -.0005"
Over 1½" Diameter = +.000" -.001"

Low input speeds require special order instructions. See introductory section.

Dimensions Type DSMF • Wall Mounted and Vertical

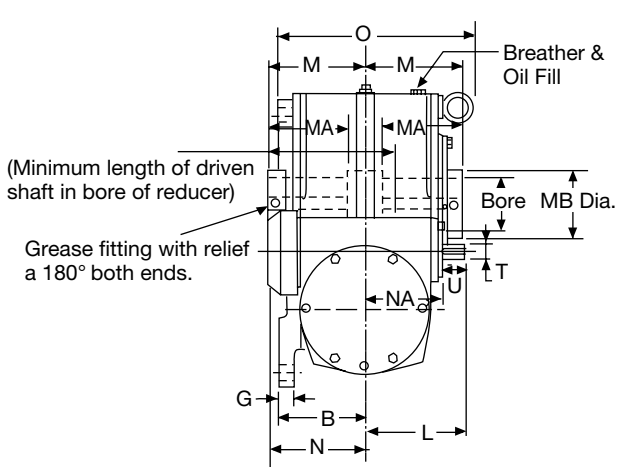

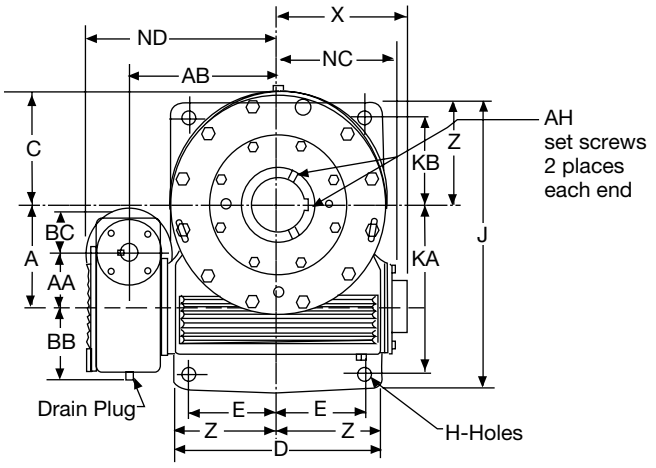

Wall Mounted Assemblies

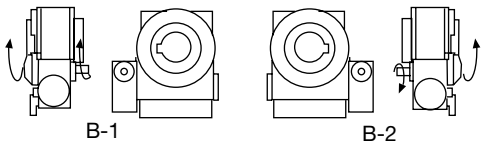

Vertical Assemblies

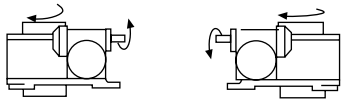

A drywell is standard for vertical assemblies sizes 60-200 only.

Unit Size	WT LBS	A	AA	AB	AH	B	BB	BC	C	D	E	G	H	J	KA	KB	L	M	MA	MB	N	NA	NC	ND	O	R	T▲	U	Keyway	Bore	Keyway	Z	X
DSMF35	130	3 1/2	2	6 5/8	3/8-16	4 1/8	2 1/2	2 1/8	4 13/16	8 3/8	3 1/2	7/8	11/16	11 3/4	6 7/8	3 1/2	4 1/2	4 11/16	4 1/8	3 1/8	4 9/16	3 1/8	5	8 7/8	9 1/8	5 3/4	11/16	1 5/16	3/16 x 3/32 x 1 1/4	2.1885 / 2.1905	1/2 x 1/4	4 3/16	6 5/8
DSMF40	190	4	2	7 3/8	3/8-16	5	2 1/2	2 1/8	5 3/8	9 1/4	3 7/8	1 1/8	11/16	13 1/8	7 5/8	3 7/8	4 1/2	5 5/16	41 1/16	3 1/2	4 9/16	3 1/8	5 11/16	9 5/8	10 1/2	6 7/16	11/16	1 5/16	3/16 x 3/32 x 1 1/4	2.438 / 2.440	5/8 x 5/16	4 5/8	7 1/2
DSMF50	285	5	2 1/2	7 7/8	1/2-13	5 5/8	3 5/8	2 1/8	7 1/2	11 1/8	4 3/4	1 1/4	13/16	15 3/8	9	4 3/4	5 3/8	5 7/8	5 1/4	4 3/16	5 1/16	3 5/8	6 7/16	10 3/16	12 9/16	7	11/16	1 3/4	3/16 x 3/32 x 1 11/16	2.938 / 2.940	3/4 x 3/8	5 9/16	8 3/16
DSMF60	420	6	3	9 1/2	1/2-13	6 1/4	4 3/8	2 9/16	8 5/8	13 3/8	5 3/4	1 3/8	13/16	18 1/8	10 1/2	5 3/4	6 1/8	6 1/2	5 3/4	4 3/4	5 7/8	4 3/16	7 3/4	12 1/4	13 7/16	7 3/4	7/8	1 7/8	3/16 x 3/32 x 1 13/16	3.438 / 3.440	7/8 x 7/16	6 11/16	9 9/16
DSMF70	560	7	3 1/2	10 3/8	1/2-13	6 1/2	4 3/4	2 9/16	9 1/4	14 5/8	6 1/4	1 3/8	15/16	20 1/8	11 3/4	6 1/4	7	6 3/4	5 7/8	5 1/2	6 9/16	5	8 3/8	13 1/4	14	8 1/8	1	2	1/4 x 1/8 x 1 15/16	3.938 / 3.940	1 x 1/2	7 5/16	10 3/16
DSMF80	705	8	4	11 5/8	1/2-13	6 5/8	5 1/8	3 5/16	10 1/2	16 1/2	7	1 1/2	1 1/16	22 1/4	12 3/4	7	7 3/4	7 1/4	6 1/4	6 1/4	8	5 11/16	9 3/8	14 15/16	14 7/8	8 3/4	1 1/8	2 1/16	1/4 x 1/8 x 2	4.438 / 4.440	1 x 1/2	8 1/4	11 9/16
DSMF90	910	9	5	13 1/8	1/2-13	7 3/4	6 1/8	3 11/16	11 3/8	18 1/2	7 7/8	1 5/8	1 3/16	25	14 3/8	7 7/8	8 3/4	8 1/4	7 1/8	7	8 9/16	6 7/16	10 3/8	16 13/16	17	9 7/8	1 3/8	2 5/16	5/16 x 5/32 x 2 1/4	4.938 / 4.940	1 1/4 x 7/16	9 1/4	13 3/8
DSMF100	1130	10	5	14 1/4	5/8-11	8 3/4	6 1/8	3 11/16	12 5/8	20 3/4	9	1 3/4	1 3/16	27 1/4	15 1/2	9	8 3/4	9 1/4	8	7 1/2	8 9/16	6 7/16	11 11/16	17 15/16	18 1/2	11	1 3/8	2 5/16	5/16 x 5/32 x 2 1/4	5.438 / 5.440	1 1/4 x 7/16	10 3/8	14 3/8
DSMF120	1760	12	6	16 3/8	5/8-11	9	7 1/4	4 1/8	14 5/8	24 1/4	10 3/8	2 1/8	1 5/16	32 3/8	18 1/2	10 3/8	10 1/4	9 3/4	8 3/8	8	10 1/16	7 3/4	13 7/16	20 5/8	19 1/2	11 5/8	1 1/2	2 11/16	3/8 x 3/16 x 2 5/8	6.000 / 6.002	1 1/2 x 1/2	12 1/8	16 1/8
DSMF140	2560	14	6	19 3/8	5/8-11	10 1/4	7 1/4	4 1/8	16 5/8	27 1/2	12	2 3/4	1 5/16	37 1/2	22	12	10 1/4	10 3/4	9	8	10 1/16	7 3/4	16	23 5/8	21 3/4	13	1 1/2	2 11/16	3/8 x 3/16 x 2 5/8	6.000 / 6.002	1 1/2 x 1/2	13 3/4	–
DSMF170	3825	17	8	22 3/8	5/8-11	11 1/2	9 1/4	5 3/16	19 1/2	33	14 1/2	2 1/2	1 9/16	44 3/4	26 1/4	14 1/2	12 1/2	12 1/4	10 1/4	9 1/4	11 3/4	9 3/8	18 11/16	28 1/8	24 3/4	14 3/4	1 7/8	3 1/8	1/2 x 1/4 x 3 1/16	6.500 / 6.502	1 1/2 x 1/2	16 1/2	–
DSMF200	5260	20	9	25 3/8	5/8-11	12 3/4	10 1/4	6 3/16	22 1/2	39	17	2 3/4	1 9/16	53	31	17	14 1/4	13 1/2	11 1/2	9 1/4	13 13/16	10 3/8	21 3/16	32	27 1/4	16	2 1/8	3 15/16	1/2 x 1/4 x 3 7/8	6.500 / 6.502	1 1/2 x 1/2	19 1/2	–

All dimensions are in inches. Use certified prints for construction. The input shaft may be rotated in either direction. Standard gear sets are cut with right hand threads giving relative shaft rotations as shown above. Shaft arrangements are shown above. Desired assembly should be specified when ordering. Standard keys are furnished with units.

▲ Tolerances: 1 1/2" Diameter or Less = +.0000" -.0005"
Over 1 1/2" Diameter = +.000" -.001"

Low input speeds require special order instructions. See introductory section.

Double Reduction Worm Gear Speed Reducers - Motorized

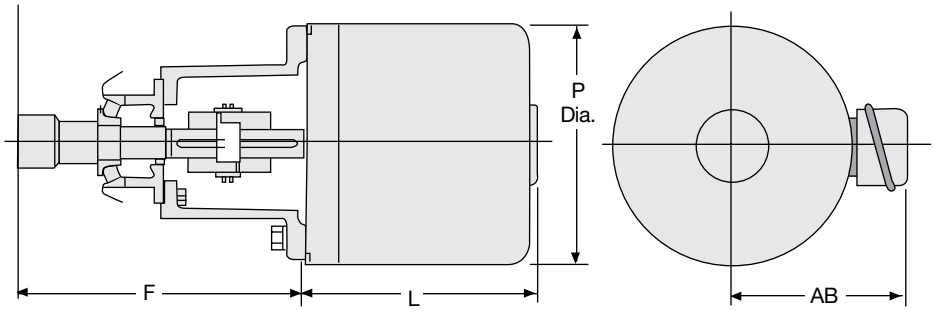

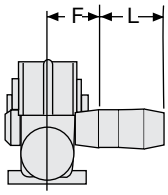

DSMBMM 35 -
DSMBMM 170

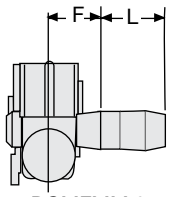

DSMFMM 35 -
DSMFMM 170

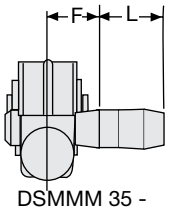

DSMMM 35 -
DSMMM 170

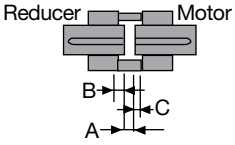

Style #1
Coupling Assembly

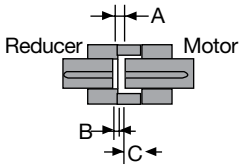

Style #2
Coupling Assembly

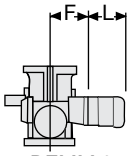

DEMM 35 -
DEMM 40

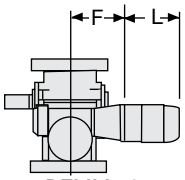

DEMM 50 -
DEMM 140

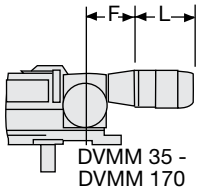

DVMM 35 -
DVMM 170

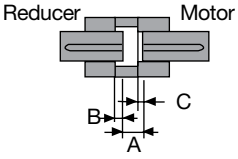

Style #3
Coupling Assembly

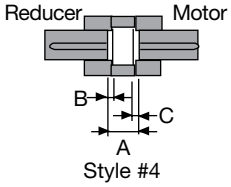

Style #4
Coupling Assembly

Dimensions - inches single worm reduction units with “C” flange motor.
Mounting mounting dimensions for type DEMM 35 - 140, DVMM 35 -170
DSMFMM 35 -170, DSMMM 35 -170, DSMBMM 35 -170.

T.E.F.C. Motor					Unit Size 35 & 40						Unit Size 50						Unit Size 60						Unit Size 70						Unit Size 80					
Motor Frame	AB	L	P	WT. LBS.	CPLG Size	Style Assy	A	B	C	F	CPLG Size	Style Assy	A	B	C	F	CPLG Size	Style Assy	A	B	C	F	CPLG Size	Style Assy	A	B	C	F	CPLG Size	Style Assy	A	B	C	F
56C		11 7/16	7 1/8	36	L-090	4	13/16	3/16	1/8	7 3/8	L-090	3	7/16	1/16	0	7 7/8	L-095	2	5/8	1/8	0	8 13/16	L-095	1	1/2	0	0	9 9/16	L-099	1	7/16	5/16	0	10 1/4
56CZ		11 7/16	7 1/8	36	L-095	2	5/8	1/8	0	7 3/8	L-095	2	1/4	0	1/4	7 7/8	L-095	3	7/16	1/16	0	8 13/16	L-095	3	5/16	3/16	0	9 9/16	L-099	1	1/4	1/2	0	10 1/4
143TC	6	10 3/8	7 1/8	30	L-095	2	3/4	1/4	0	7 3/8	L-095	2	3/8	0	1/8	7 7/8	L-095	2	9/16	1/16	0	8 13/16	L-095	3	7/16	1/16	0	9 9/16	L-099	1	3/8	3/8	0	10 1/4
145TC	6	11 3/8	7 1/8	34	L-095	2	3/4	1/4	0	7 3/8	L-095	2	3/8	0	1/8	7 7/8	L-095	2	9/16	1/16	0	8 13/16	L-095	3	7/16	1/16	0	9 9/16	L-099	1	1/4	1/2	0	10 1/4
182TC	7	12 3/4	9 3/16	56													L-099	2	7/16	0	5/16	9 3/16	L-099	2	5/16	0	7/16	9 15/16	L-099	1	1/4	1/2	0	10 5/8
184TC	7	13 3/4	9 3/16	70													L-099	2	7/16	0	5/16	9 3/16	L-099	2	5/16	0	7/16	9 15/16	L-099	1	1/4	1/2	0	10 5/8
213TC	8 13/16	15 3/8	11 1/4	141													L-100	2	5/16	0	7/16	9 9/16	L-100	2	3/16	0	9/16	10 5/16	L-100	2	1/8	0	5/8	11
215TC	8 13/16	16 7/8	11 1/4	176													L-100	2	5/16	0	7/16	9 9/16	L-100	2	3/16	0	9/16	10 5/16	L-100	2	1/8	0	5/8	11

T.E.F.C. Motor					Unit Size 90 & 100						Unit Size 120 & 140						Unit Size 170					
Motor Frame	AB	L	P	WT. LBS.	CPLG size	Style Assy	A	B	C	F	CPLG size	Style Assy	A	B	C	F	CPLG size	Style Assy	A	B	C	F
143TC	6	10 3/8	7 1/8	30	L-100	1	1/8	5/8	0	11												
145TC	6	11 3/8	7 1/8	34	L-100	1	1/8	5/8	0	11												
182TC	7	12 3/4	9 3/16	56	L-100	4	1 1/4	1/4	1/4	12 5/8	L-110	4	1 15/16	9/16	1/2	14 13/16	L-150	2	1 1/4	1/4	0	16 3/8
184TC	7	13 3/4	9 3/16	70	L-100	4	1 1/4	1/4	1/4	12 5/8	L-110	4	1 15/16	9/16	1/2	14 13/16	L-150	2	1 1/4	1/4	0	16 3/8
213TC	8 13/16	15 3/8	11 1/4	141	L-110	1	3/4	1/8	0	12 5/8	L-110	4	1 7/16	5/16	1/4	14 13/16	L-150	1	3/4	1/4	0	16 3/8
215TC	8 13/16	16 7/8	11 1/4	176	L-110	1	3/4	1/8	0	12 5/8	L-110	4	1 7/16	5/16	1/4	14 13/16	L-150	1	3/4	1/4	0	16 3/8
254TC	10 1/16	18 9/16	13 1/2	252	L-150	2	1/8	0	7/8	12 5/8	L-150	1	13/16	3/16	0	14 13/16	L-150	1	1/8	7/16	7/16	16 3/8
256TC	10 1/16	20 5/16	13 1/2	302	L-150	2	1/8	0	7/8	12 5/8	L-150	1	13/16	3/16	0	14 13/16	L-150	1	1/8	7/16	7/16	16 3/8

*Motor dimensions will vary slightly with make of motor. Dimensions shown are for totally enclosed fan cooled motor. Open, dripproof or totally enclosed motors may be furnished.

Triple Reduction
Worm Gear Speed Reducers

- **Ratios from 5000:1 to 17 5,000:1**
- **HP from 0.09 to 6.25**
- **Output torque to 583,000 in. lbs.**
- **Output RPM down to 0.01 0**
- **Ideal for ultra-slow speed, high torque applications**

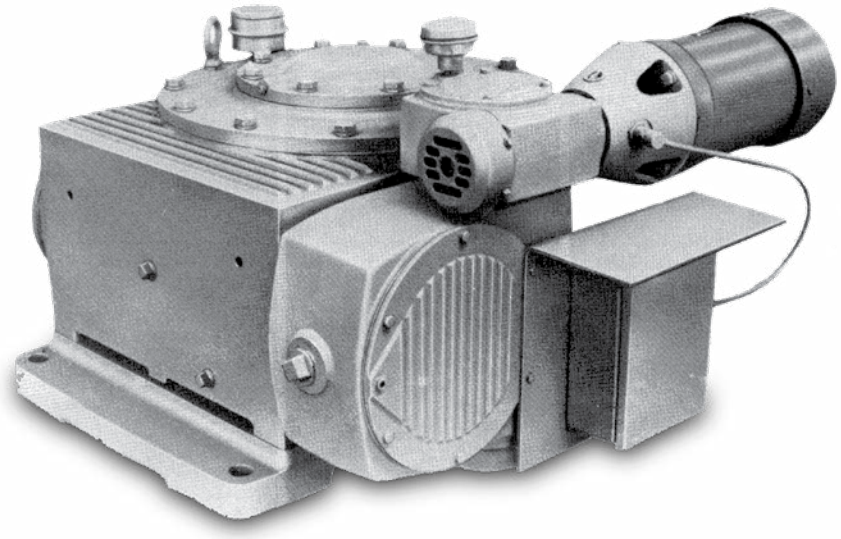

Delroyd® DDVM series triple-reduction worm gear speed reducers are available in ratios from 5000:1 to 175,000:1 and center distances from 7 to 20 in. (larger sizes are available on request). Output torque ranges from 33,000 in. lbs. for the 7-in. CD DDVM-70 to 582,900 in. lbs. for the DDVM-200. Mechanical HP input requirements are from 0.09 for the 175,000:1 7-in. CD reducer to 6.246 for the 5000:1 20-in. CD unit.

These reducers are available in any four configurations: horizontal, vertical, shafted and shaft-mounted.

They are ideal for water/wastewater equipment drive applications such as thickeners and clarifiers which require a vertical downshaft. Other available configurations also make DELROYD R triple reduction reducers perfect for use on mixers, elevators, solar panels, astronomical telescopes, indexing tables, hoists, conveyers or other process or materials handling systems where large torques/slow speeds are needed.

These reducers are also available with a helical primary reduction stage and are termed the HDVM series.

Triple Reduction Worm Gear Speed Reducers

7.000 in. center distance (Ratings are for 1750 RPM input speed)

Nominal Ratio	Actual Ratio	Input HP	Output Torque	Effi-ciency	Output RPM
5,000:1	4,925.125:1 (15 1/2 x 15 1/2 x 20 1/2)	0.495	34,300"#	39%	0.355
6,000:1	5,945:1 (9 2/3 x 30 x 20 1/2)	0.458	34,300"#	35%	0.294
8,000:1	7.926.667:1 (9 2/3 x 40 x 20 1/2)	0.415	34,300"#	29%	0.221
10,000:1	9,908.333:1 (9 2/3 x 50 x 20 1/2)	0.356	34,300"#	27%	0.177
12,000:1	12,607.5:1 (20 1/2 x 30 x 20 1/2)	0.280	34,300"#	27%	0.139
15,000:1	15,375:1 (25 x 30 x 20 1/2)	0.259	34,300"#	24%	0.114
20,000:1	20,500:1 (25 x 40 x 20 1/2)	0.233	34,400"#	20%	0.085
25,000:1	24,600:1 (30 x 40 x 20 1/2)	0.204	34,400"#	19%	0.071
30,000:1	30,750:1 (30 x 50 x 20 1/2)	0.183	34,400"#	17%	0.057
35,000:1	35,875:1 (25 x 70 x 20 1/2)	0.148	34,400"#	14%	0.049
40,000:1	41,000:1 (40 x 50 x 20 1/2)	0.155	34,400"#	15%	0.043
50,000:1	51,250:1 (50 x 50 x 20 1/2)	0.143	34,400"#	14%	0.034
60,000:1	61,500:1 (50 x 60 x 20 1/2)	0.120	34,400"#	11%	0.028
75,000:1	73,800:1 (60 x 60 x 20 1/2)	0.108	34,400"#	10%	0.024
125,000:1	120,050:1 (70 x 70 x 24 1/2)	0.111	33,700"#	7%	0.015
175,000:1	168,000:1 (60 x 70 x 40)	0.091	33,000"#	6%	0.010

8.000 in. center distance (Ratings are for 1750 RPM input speed)

Nominal Ratio	Actual Ratio	Input HP	Output Torque	Effi-ciency	Output RPM
5,000:1	4,925.125:1 (15 1/2 x 15 1/2 x 20 1/2)	0.672	50,000"#	42%	0.355
6,000:1	5,945:1 (9 2/3 x 30 x 20 1/2)	0.600	50,100"#	39%	0.294
8,000:1	7.926.667:1 (9 2/3 x 40 x 20 1/2)	0.517	50,100"#	34%	0.221
10,000:1	9,908.333:1 (9 2/3 x 50 x 20 1/2)	0.454	50,200"#	31%	0.177
12,000:1	12,607.5:1 (20 1/2 x 30 x 20 1/2)	0.357	50,200"#	31%	0.139
15,000:1	15,375:1 (25 x 30 x 20 1/2)	0.336	50,200"#	27%	0.114
20,000:1	20,500:1 (25 x 40 x 20 1/2)	0.296	50,200"#	23%	0.085
25,000:1	24,600:1 (30 x 40 x 20 1/2)	0.248	50,200"#	23%	0.071
30,000:1	30,750:1 (30 x 50 x 20 1/2)	0.227	50,300"#	20%	0.057
35,000:1	35,875:1 (25 x 70 x 20 1/2)	0.243	50,300"#	16%	0.049
40,000:1	41,000:1 (40 x 50 x 20 1/2)	0.189	50,300"#	18%	0.043
50,000:1	51,250:1 (50 x 50 x 20 1/2)	0.160	50,300"#	17%	0.034
60,000:1	61,500:1 (50 x 60 x 20 1/2)	0.151	50,300"#	15%	0.028
75,000:1	73,800:1 (60 x 60 x 20 1/2)	0.146	50,300"#	13%	0.024
125,000:1	120,050:1 (70 x 70 x 24 1/2)	0.113	48,700"#	10%	0.015
175,000:1	168,000:1 (60 x 70 x 40)	0.112	47,300"#	7%	0.010

9.000 in. center distance (Ratings are for 1750 RPM input speed)

Nominal Ratio	Actual Ratio	Input HP	Output Torque	Effi-ciency	Output RPM
5,000:1	4,925.125:1 (15 1/2 x 15 1/2 x 20 1/2)	0.872	69,600"#	45%	0.355
6,000:1	5,845.917:1 (9 2/3 x 29 1/2 x 20 1/2)	0.827	69,700"#	40%	0.299
8,000:1	7,926.667:1 (9 2/3 x 40 x 20 1/2)	0.679	69,800"#	36%	0.221
10,000:1	9,908.333:1 (9 2/3 x 50 x 20 1/2)	0.652	69,800"#	31%	0.177
12,000:1	12,397.375:1 (20 1/2 x 29 1/2 x 20 1/2)	0.602	69,900"#	33%	0.141
15,000:1	15,118.75:1 (25 x 29 1/2 x 20 1/2)	0.642	69,900"#	30%	0.116
20,000:1	20,500:1 (25 x 40 x 20 1/2)	0.364	69,900"#	26%	0.085
25,000:1	24,600:1 (30 x 40 x 20 1/2)	0.395	70,000"#	20%	0.071
30,000:1	30,750:1 (30 x 50 x 20 1/2)	0.287	70,000"#	22%	0.057
35,000:1	35,875:1 (25 x 70 x 20 1/2)	0.285	70,000"#	19%	0.049
40,000:1	41,000:1 (40 x 50 x 20 1/2)	0.237	65,500"#	20%	0.043
50,000:1	51,250:1 (50 x 50 x 20 1/2)	0.211	70,000"#	18%	0.034
60,000:1	61,500:1 (50 x 60 x 20 1/2)	0.198	70,000"#	16%	0.028
75,000:1	73,800:1 (60 x 60 x 20 1/2)	0.188	70,000"#	14%	0.024
125,000:1	120,050:1 (70 x 70 x 24 1/2)	0.157	68,000"#	10%	0.015
175,000:1	168,000:1 (60 x 70 x 40)	0.157	66,400"#	7%	0.010

10.000 in. center distance (Ratings are for 1750 RPM input speed)

Nominal Ratio	Actual Ratio	Input HP	Output Torque	Effi-ciency	Output RPM
5,000:1	4,925.125:1 (15 1/2 x 15 1/2 x 20 1/2)	1.116	93,000"#	47%	0.355
6,000:1	5,845.917:1 (9 2/3 x 29 1/2 x 20 1/2)	1.053	93,200"#	42%	0.299
8,000:1	7,926.667:1 (9 2/3 x 40 x 20 1/2)	0.883	93,300"#	37%	0.221
10,000:1	9,908.333:1 (9 2/3 x 50 x 20 1/2)	0.770	93,400"#	34%	0.177
12,000:1	12,397.375:1 (20 1/2 x 29 1/2 x 20 1/2)	0.616	93,400"#	34%	0.141
15,000:1	15,118.75:1 (25 x 29 1/2 x 20 1/2)	0.537	93,500"#	32%	0.116
20,000:1	20,500:1 (25 x 40 x 20 1/2)	0.452	93,500"#	28%	0.085
25,000:1	24,600:1 (30 x 40 x 20 1/2)	0.391	93,600"#	27%	0.071
30,000:1	30,750:1 (30 x 50 x 20 1/2)	0.367	93,600"#	23%	0.057
35,000:1	35,875:1 (25 x 70 x 20 1/2)	0.362	93,600"#	20%	0.049
40,000:1	41,000:1 (40 x 50 x 20 1/2)	0.302	93,600"#	21%	0.043
50,000:1	51,250:1 (50 x 50 x 20 1/2)	0.267	93,600"#	19%	0.034
60,000:1	61,500:1 (50 x 60 x 20 1/2)	0.249	93,600"#	17%	0.028
75,000:1	73,800:1 (60 x 60 x 20 1/2)	0.220	93,600"#	16%	0.024
125,000:1	120,050:1 (70 x 70 x 24 1/2)	0.175	91,000"#	12%	0.015
175,000:1	168,000:1 (60 x 70 x 40)	0.164	89,200"#	9%	0.010

Maximum momentary starting load must not exceed 300% of speed reducer rating shown above. Other ratio combinations are available upon request.

Triple Reduction Worm Gear Speed Reducers

12.000 in. center distance (Ratings are for 1750 RPM input speed)

Nominal Ratio	Actual Ratio	Input HP	Output Torque	Effi-ciency	Output RPM
5,000:1	5,063.333:1 (5 1/6 x 40 x 24 1/2)	1.916	150,200"#	43%	0.346
6,000:1	5,802.417:1 (9 2/3 x 24 1/2 x 24 1/2)	1.600	150,400"#	45%	0.302
8,000:1	7,784.875:1 (15 1/2 x 20 1/2 x 24 1/2)	1.280	150,700"#	42%	0.225
10,000:1	10,296.125:1 (20 1/2 x 20 1/2 x 24 1/2)	1.044	150,900"#	39%	0.170
12,000:1	12,305.125:1 (20 1/2 x 24 1/2 x 24 1/2)	0.897	151,000"#	38%	0.142
15,000:1	14,706.125:1 (24 1/2 x 24 1/2 x 24 1/2)	0.947	151,000"#	36%	0.119
20,000:1	20,090:1 (20 1/2 x 40 x 24 1/2)	0.921	151,200"#	31%	0.087
25,000:1	25,112.5:1 (20 1/2 x 50 x 24 1/2)	0.774	151,300"#	27%	0.070
30,000:1	30,012.5:1 (24 1/2 x 50 x 24 1/2)	0.609	151,400"#	23%	0.058
35,000:1	36,015:1 (24 1/2 x 60 x 24 1/2)	0.486	151,400"#	24%	0.049
40,000:1	39,200:1 (40 x 40 x 24 1/2)	0.447	151,400"#	24%	0.045
50,000:1	49,000:1 (40 x 50 x 24 1/2)	0.390	151,500"#	22%	0.036
60,000:1	61,250:1 (50 x 50 x 24 1/2)	0.343	151,500"#	20%	0.029
75,000:1	73,500:1 (50 x 60 x 24 1/2)	0.318	151,500"#	18%	0.024
125,000:1	120,050:1 (70 x 70 x 24 1/2)	0.250	151,600"#	14%	0.015
175,000:1	168,000:1 (60 x 70 x 40	0.223	148,700"#	11%	0.010

14.000 in. center distance (Ratings are for 1750 RPM input speed)

Nominal Ratio	Actual Ratio	Input HP	Output Torque	Effi-ciency	Output RPM
5,000:1	4,925.125:1 (15 1/2 x 15 1/2 x 20 1/2)	2.726	223.700"#	45%	0.346
6,000:1	5,945:1 (9 2/3 x 30 x 20 1/2)	2.280	224,000"#	47%	0.302
8,000:1	7.926.667:1 (9 2/3 x 40 x 20 1/2)	1.820	224,500"#	44%	0.225
10,000:1	9,908.333:1 (9 2/3 x 50 x 20 1/2)	1.479	224,800"#	41%	0.170
12,000:1	12,607.5:1 (20 1/2 x 30 x 20 1/2)	1.301	225,000"#	39%	0.142
15,000:1	15,375:1 (25 x 30 x 20 1/2)	1.372	225,000"#	37%	0.119
20,000:1	20,500:1 (25 x 40 x 20 1/2)	1.329	225,200"#	32%	0.087
25,000:1	24,600:1 (30 x 40 x 2 1/2)	1.112	225.400"#	28%	0.070
30,000:1	30,750:1 (30 x 50 x 20 1/2)	0.773	225,600"#	27%	0.058
35,000:1	35,875:1 (25 x 70 x 20 1/2)	0.696	225,600"#	25%	0.049
40,000:1	41,000:1 (40 x 50 x 20 1/2)	0.615	225,600"#	26%	0.045
50,000:1	51,250:1 (50 x 50 x 20 1/2)	0.556	225,700"#	23%	0.036
60,000:1	61,500:1 (50 x 60 x 20 1/2)	0.487	225,800"#	21%	0.029
75,000:1	73,800:1 (60 x 60 x 20 1/2)	0.426	225,800"#	20%	0.024
125,000:1	120,050:1 (70 x 70 x 24)	0.348	225,800"#	15%	0.015
175,000:1	168,000:1 (60 x 70 x 40)	0.295	211,500"#	12%	0.011

17.000 in. center distance (Ratings are for 1750 RPM input speed)

Nominal Ratio	Actual Ratio	Input HP	Output Torque	Effi-ciency	Output RPM
5,000:1	5.063.333:1 (5 1/6 x 40 x 24 1/2)	4.431	379,800"#	47%	0.346
6,000:1	5,802.417:1 (9 2/3 x 24 1/2 x 24 1/2)	3.873	380,400"#	47%	0.302
8,000:1	7.784.875:1 (15 1/2 x 20 1/2 x 24 1/2)	3.023	381,400"#	45%	0.225
10,000:1	10,296.125:1 (20 1/2 x 20 1/2 x 24 1/2)	2.454	382,200"#	42%	0.170
12,000:1	12,305.125:1 (20 1/2 x 24 1/2 x 24 1/2)	2.157	382,600"#	40%	0.142
15,000:1	14,706.125:1 (24 1/2 x 24 1/2 x 24 1/2)	2.272	382,600"#	38%	0.119
20,000:1	20,090:1 (20 1/2 x 40 x 24 1/2)	2.191	382,900"#	33%	0.087
25,000:1	25,112.5:1 (20 1/2 x 50 x 24 1/2)	1.827	383,300"#	29%	0.070
30,000:1	30,012.5:1 (24 1/2 x 50 x 24 1/2)	1.315	383,700"#	27%	0.058
35,000:1	36,015:1 (24 1/2 x 60 x 24 1/2)	1.138	383,800"#	26%	0.049
40,000:1	39,200:1 (40 x 40 x 24 1/2)	1.046	383,900"#	26%	0.045
50,000:1	49,000:1 (40 x 50 x 24 1/2)	0.907	384,000"#	24%	0.036
60,000:1	61,250:1 (50 x 50 x 24 1/2)	0.791	384,100"#	22%	0.029
75,000:1	73,500:1 (50 x 60 x 24 1/2)	0.691	384,200"#	21%	0.024
125,000:1	120,050:1 (70 x 70 x 24 1/2)	0.556	384,300"#	16%	0.015
175,000:1	165,900:1 (60 x 70 x 39 1/2)	0.463	359,900"#	13%	0.011

20.000 in. center distance (Ratings are for 1750 RPM input speed)

Nominal Ratio	Actual Ratio	Input HP	Output Torque	Effi-ciency	Output RPM
5,000:1	5.063.333:1 (5 1/6 x 40 x 24 1/2)	6.246	558,100"#	49%	0.346
6,000:1	5,802.417:1 (9 2/3 x 24 1/2 x 24 1/2)	5.350	559,000"#	50%	0.302
8,000:1	7.784.875:1 (15 1/2 x 20 1/2 x 24 1/2)	4.255	560,700"#	47%	0.225
10,000:1	10,296.125:1 (20 1/2 x 20 1/2 x 24 1/2)	3.444	561,900"#	44%	0.170
12,000:1	12,305.125:1 (20 1/2 x 24 1/2 x 24 1/2)	3.173	562,500"#	42%	0.142
15,000:1	14,706.125:1 (24 1/2 x 24 1/2 x 24 1/2)	3.037	563,000"#	40%	0.119
20,000:1	20,090:1 (20 1/2 x 40 x 24 1/2)	2. 513	563,700"#	35%	0.087
25,000:1	25,112.5:1 (20 1/2 x 50 x 24 1/2)	2.012	564,000"#	31%	0.070
30,000:1	30,012.5:1 (24 1/2 x 50 x 24 1/2)	1.800	564,300"#	29%	0.058
35,000:1	36,015:1 (24 1/2 x 60 x 24 1/2)	1.612	564,500"#	27%	0.049
40,000:1	39,200:1 (40 x 40 x 24 1/2)	1.428	564,600"#	28%	0.045
50,000:1	49,000:1 (40 x 50 x 24 1/2)	1.280	564,800"#	25%	0.036
60,000:1	61,250:1 (50 x 50 x 24 1/2)	1.114	565,000"#	23%	0.029
75,000:1	73,500:1 (50 x 60 x 24 1/2)	1.017	565,100"#	21%	0.024
125,000:1	120,050:1 (70 x 70 x 24 1/2)	0.817	565,300"#	16%	0.015
175,000:1	165,900:1 (60 x 70 x 39 1/2)	0.750	582,900"#	13%	0.011

Maximum momentary starting load must not exceed 300% of speed reducer rating shown above. Other ratio combinations are available upon request.

Triple Reduction Worm Gear Speed Reducers

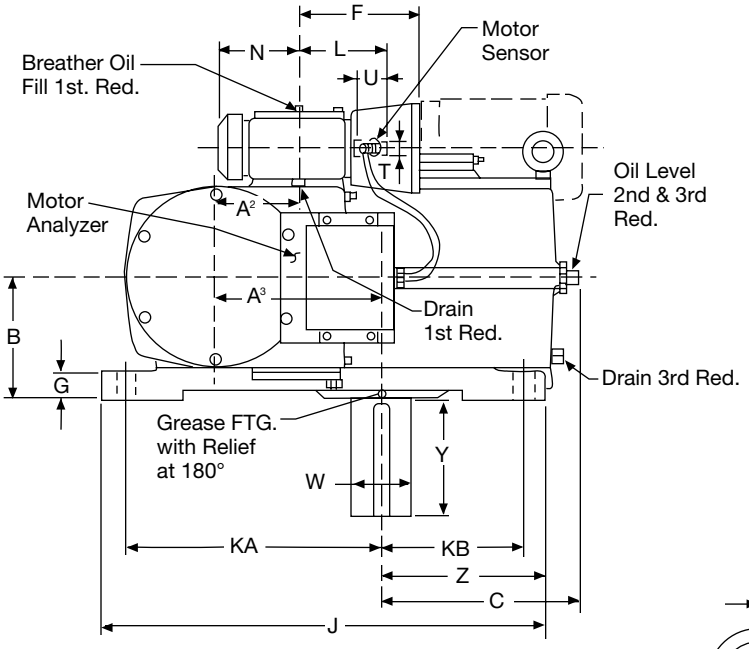

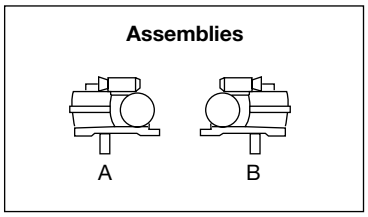

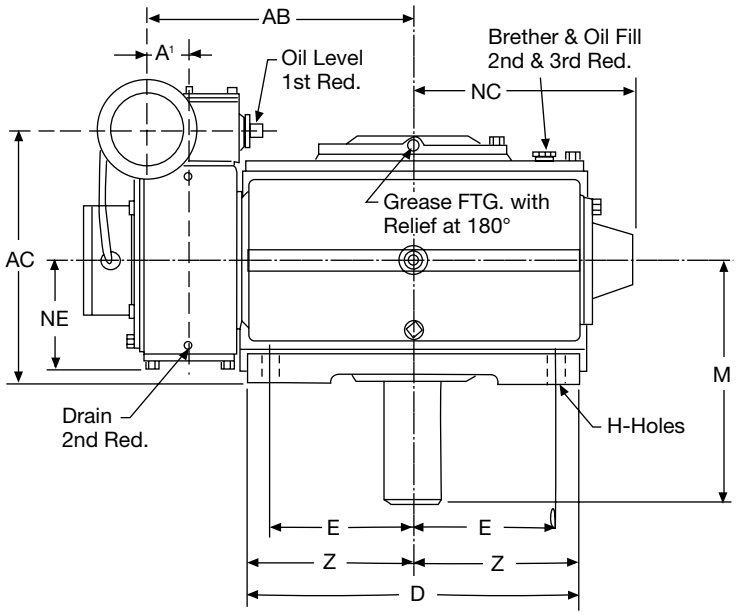

A drywell is standard for vertical assemblies sizes 70-200 only.

Unit Size	WT. LBS.	A3	A2	A1	AB	AC	B	C	D	E	F	G	H	J	KA	KB	L	M	N	NC	NE
DDVM70	585	7	3 1/2	2	12 3/8	13 1/8	6 1/2	9 1/4	14 5/8	6 1/4	7 3/8	1 3/8	15/16	20 1/8	11 3/4	6 1/4	4 1/2	11 1/2	6 9/16	10 3/16	5 1/16
DDVM80	725	8	4	2	13 5/8	14	6 5/8	10 1/8	16 1/2	7	7 3/8	1 1/2	1 1/16	22 1/4	12 3/4	7	4 1/2	12 1/8	8	11 9/16	5 3/4
DDVM90	930	9	5	2 1/2	15 5/8	15 5/8	7 3/4	10 1/2	18 1/2	7 7/8	7 7/8	1 5/8	1 3/16	25	14 3/8	7 7/8	5 3/8	14 1/4	8 9/16	13 3/8	6 7/16
DDVM100	1140	10	5	2 1/2	16 3/4	16 5/8	8 3/4	11 5/8	20 3/4	9	7 7/8	1 3/4	1 3/16	27 1/4	15 1/2	9	5 3/8	16	8 9/16	14 3/8	8 3/16
DDVM120	1830	12	6	3	19 3/8	18 1/2	9	13 5/8	24 1/4	10 3/8	8 13/16	2 1/8	1 5/16	32 3/8	18 1/2	10 3/8	6 1/8	17 1/2	10 1/16	16 1/8	7 7/8
DDVM140	2580	14	6	3	22 3/8	19 3/4	10 1/4	15 3/8	27 1/2	12	8 13/16	2 1/4	1 5/16	37 1/2	22	12	6 1/8	19 1/4	10 1/16	16	9 9/16
DDVM170	4320	17	8	4	26 3/8	23 1/8	11 1/2	18 1/2	33	14 1/2	10 1/4	2 1/2	1 9/16	44 3/4	26 1/4	14 1/2	7 3/4	21 1/2	11 3/4	18 15/16	9 1/2
DDVM200	5880	20	9	5	30 3/8	25 7/8	12 3/4	21 7/8	39	17	11	2 3/4	1 9/16	53	31	17	8 3/4	23 3/4	13 13/16	21 3/16	10 1/2

Unit Size	T▲	U	Keyway	W▲	Y	¥	Z
DDVM70	1	2	1/4 x 1/8 x 1 15/16	2 1/2	5	5/8 x 5/16 x 4 15/16	7 5/16
DDVM80	1 1/8	2 1/16	1/4 x 1/8 x 2	2 3/4	5 1/2	5/8 x 5/16 x 5 7/16	8 1/4
DDVM90	1 3/8	2 5/16	5/16 x 5/32 x 2 1/4	3 1/4	6 1/2	3/4 x 3/8 x 6 3/8	9 1/4
DDVM100	1 3/8	2 5/16	5/16 x 5/32 x 2 1/4	3 5/8	7 1/4	7/8 x 7/16 x 7 3/16	10 3/8
DDVM120	1 1/2	2 11/16	3/8 x 3/16 x 2 5/8	4 1/4	8 1/2	1 x 1/2 x 8 3/8	12 1/8
DDVM140	1 1/2	2 11/16	3/8 x 3/16 x 2 5/8	5	9	1 1/4 x 5/8 x 8 5/8	13 3/4
DDVM170	1 7/8	3 1/8	1/2 x 1/4 x 3 1/16	5 3/4	10	1 1/2 x 3/4 x 9 3/4	16 1/2
DDVM200	2 1/8	3 15/16	1/2 x 1/4 x 3 7/8	6 1/2	11	1 1/2 x 3/4 x 10 1/2	19 1/2

Larger sizes available on request.

Available in shafted unit as shown or hollow output units.

BT Pinch Roll Reduction Units

- **Hardened and ground AISI 4150 steel worms**
- **Bronze-rim worm gears with cast iron centers**
- **Heat-treated steel output shafts in horizontal and up- or down-vertical configurations**
- **Tapered and spherical roller bearings**
- **Fabricated steel housings**

Example of selection procedure

1. A 1750 RPM motor will be used to power a pinch roll unit. Output shaft speed to be approximately 60 RPM. 15 HP input.

2. 1750/60 = 29.17 reduction ratio. Look in 30:1 ratio table on page 25 15/1.5 = 10.0 mechanical input horsepower needed. A BT60 unit with 6.0" center distance provides 10.2 HP and its 29½ nominal ratio gives an output shaft speed of 59.32 RPM.

Features

1. Mechanical input horsepower ratings are 1.5 times the single reduction reducer ratings published on pages 22-27 of this catalog center distances.

2. Each output shaft will transmit 75% of the torque ratings listed on pages 22-27 of this catalog assuming that the input HP divides equally. This should be the case if both rolls on the output shafts are of the same diameter.

3. Delroyd BT units can be fan-cooled, water-cooled or force feed-cooled with an oil-circulating pump. Contact DELROYD Worm Gear for thermal ratings.

4. All bearings and bearing retainers are designed to withstand the additional thrust imposed by driving two gears with a common worm shaft.

5. Delroyd BT units can be furnished with double-end input shafts for mounting in series. All standard worms are designed to carry 10,000 psi torsional stress. If input torque results in a torsional stress greater than 10,000 psi, a larger root diameter worm must be selected when driving worms in series. Before final selection is made for tandem-driving units, consult Delroyd Worm Gear.

6. The Delroyd involute helicoid thread form permits simple, accurate gearing adjustments without running in expensive matched, lapped worm and gear sets.

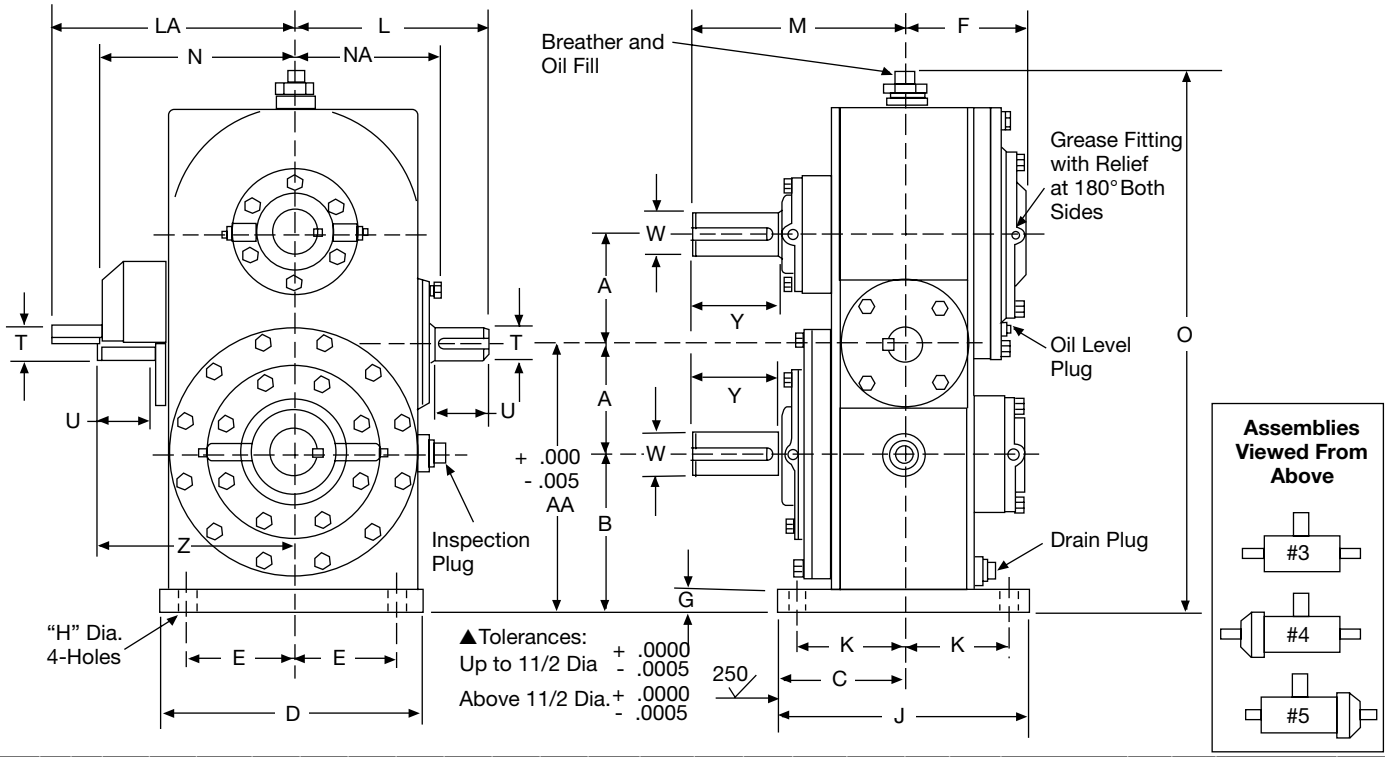

Unit Size	C.D.	A	AA	B	C	D	E	F	G	H	J	K	L	LA	M	N	NA	O	T▲	U	Keyway	W▲	Y	Keyway	Z
BT30	3	3	7-1/4	4-1/4	4.125 4.120	7-1/2	3	3-11/16	1/2	9/16	8-1/4	3-3/4	6-1/8	7-13/16	6	5-15/16	4-3/16	14-1/4	7/8	1-7/8	3/16 x 3/32 x 1-13/16	1-1/4	2-1/2	1/4 x 1/8 x 2-3/8	6-1/8
BT40	4	4	9-1/4	5-1/4	5.000 4.995	10-1/4	4-1/4	4-7/8	3/4	13/16	10	4-1/4	7-3/4	9-13/16	8-1/2	7-7/8	5-3/4	19-1/2	1-1/8	2-1/16	1/4 x 1/8 x 2	1-3/4	3-1/2	3/8 x 3/16 x 3-7/16	7-3/4
BT50	5	5	12-1/4	7-1/4	5.625 5.620	11-3/4	4-3/4	5-1/2	1	13/16	11-1/4	4-3/4	8-3/4	10-15/16	9-5/8	8-5/8	6-3/8	24-3/4	1-3/8	2-5/16	5/16 x 5/32 x 2-1/4	2	4	1/2 x 1/4 x 3-7/8	8-3/4
BT60	6	6	14-1/2	8-1/2	6.000 5.995	14	5-1/2	6-1/8	1-1/8	15/16	12	5	10-1/4	12-5/8	10-3/4	10-1/16	7-7/8	29-1/4	1-1/2	2-11/16	3/8 x 3/16 x 2-5/8	2-1/4	4-1/2	1/2 x 1/4 x 4-3/8	10-1/4
BT70	7	7	16	9	6.500 6.495	15-1/4	6-1/4	6-7/16	1-1/8	1-1/16	13	5-1/2	11-1/2	13-7/8	11-1/2	10-3/4	8-1/2	32-1/2	1-5/8	3-1/8	3/8 x 3/16 x 3-1/16	2-1/2	5	5/8 x 5/16 x 4-15/16	11-1/2
BT80	8	8	18	10	7.000 6.995	17-1/8	7	6-1/2	1-1/4	1-3/16	14	5-3/4	12-1/2	15-1/2	12-1/8	11 3/4	9-1/2	36-1/2	1-7/8	3-1/8	1/2 x 1/4 x 3-1/16	2-3/4	5-1/2	5/8 x 5/16 x 5-7/16	13-1/8
BT90	9	9	20	11	8.000 7.995	19	7-3/4	7-5/8	1-1/4	1-7/16	16	6-1/2	14-1/4	17-3/4	14-1/4	13-7/8	10-1/2	40-1/2	2-1/8	3-15/16	1/2 x 1/4 x 3-7/8	3-1/4	6-1/2	3/4 x 3/8 x 6-3/8	15-3/16
BT100	10	10	22	12	8.500 8.495	21-1/2	8-3/4	8-5/8	1-1/4	1-7/16	17	7	15-1/2	18-13/16	16	15-1/8	11-13/16	43-3/4	2-1/4	4	1/2 x 1/4 x 3-15/16	3-5/8	7-1/4	7/8 x 7/16 x 7-3/16	15-5/8
BT120	12	12	26	14	10.000 9.995	25-1/4	11	8-7/8	1-1/2	1-9/16	20	8-1/2	18	21-9/16	17-1/2	17	13-9/16	51-1/2	2-1/2	4-9/16	5/18 x 5/16 x 4-1/2	4-1/4	8-1/2	1 x 1/2 x 8-3/8	18-1/8

▲ Tolerances: Up to 1½ Dia. + .0000 - .0005 Above 1½ Dia. + .0000 - .0005

P Mixer Drive Units

Worm Gear Mixer Drives…

Reliable power transmission for mixers/agitatiors.

Features

Fluid mixing is often a very complex process. While the properties of the materials to be mixed, as well as the mixing vessel and agitator are very important considerations, the type of drive can greatly affect mixing costs - both operating and initial investment. For a wide variety of materials in chemical, process, pollution control and many other applications, Delroyd Worm gear drives for mixers and agitators offer many advantages over the other types of gearing and drive units.

• Because of their unique worm and gear design, Delroyd worm gear sets operate with multiple tooth contact at all times. This assures shockless power delivery. As a result, operation is smooth and extremely quiet, normally in a sound range of 76 to 80 dBA ... very important for meeting OSHA standards.

• Single reduction Delroyd worm gear sets can easily provide gear reductions of 5: 1 through 70:1, for output speeds down to 25 rpm (using standard 1750 rpm motors). With double reduction Delroyd helical-worm gear reducers, gear reduction can go from 15:1 to 350:1 ratio to provide outputs as low as 5 rpm. This allows economical yet efficient mixing at lower speeds: power costs as well as initial capital outlay are usually lower with Delroyd worm gear drives.

Please remember that gearing efficiency is quite different from mixing efficiency. While mixing efficiency is influenced by gearing efficiency, it also depends on other technical and economic factors.

• Delroyd worm gear drives are engineered to withstand up to 300% momentary peak overloads and shock loads ... forces that would cause other forms of gearing to fail.

• Minimum service factor for Delroyd mixer drives is 1.25.

• In Delroyd units, heavy-duty tapered Timken roller bearings (B-I0 life of over 10,000 hours on the worm shaft; B-I0 life of 100,000 hours on low speed shaft) minimize shaft vibration and sensitivity to shaft deflection. This eliminates the need for hollow quill construction and lowers the overall cost of the mixer/agitator.

• The centrifugally cast phosphorous bronze gear mates with a hardened, ground and polished steel worm. As the drive operates, the bronze gear conforms and work-hardens to the contour of the worm. This is responsible for the saying that “Delroyd worm gears wear in, not wear out.”

• Standard drywell construction provides positive protection against leakage of lubricants. There’s no danger of product contamination.

Standard Delroyd units range from 3 through 14-inch center distances, and horsepower from .132 to 265 HP.

Drives with even larger center distances and greater horsepower are available.

Mixer Drive Nomenclature

Example:

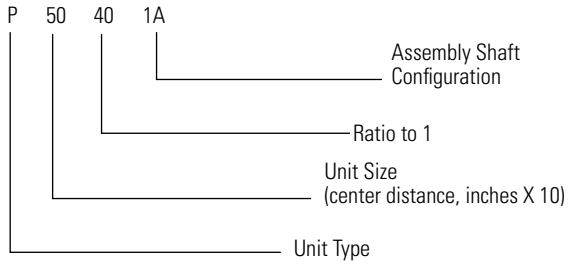

Delroyd Mixer Unit Types Available

Options	Single Reduction	Double-Reduction Helical-Worm	Double-Reduction Worm-Worm
Standard Shaft	P	HP	DP*
Tapered Output Shaft	PT	HPT *	DPT*
Scoop for Foot-Mounted Motor	PK*	HPK*	DPK*
Adaptor for “C”-Mounted Motor	PM*	HPM*	DPM*

*Available but not included in dimensional sheets.
Note: If high overhung load capacity is needed, request information on Delroyd VFF and HVFF Series units.

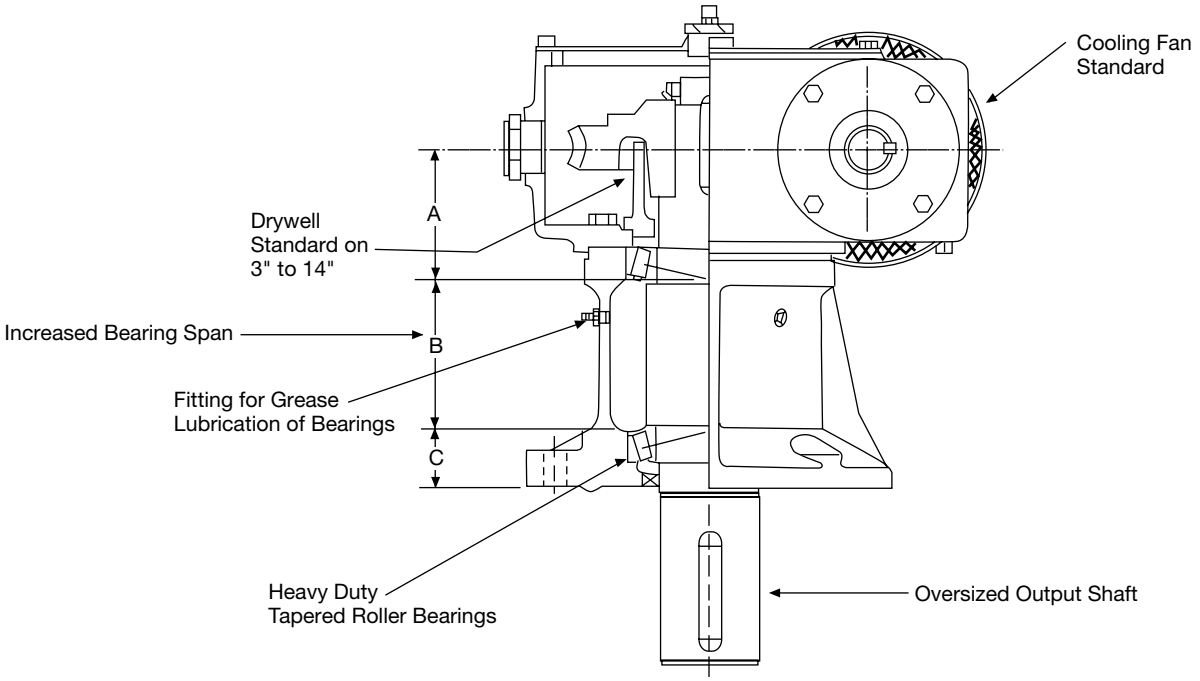

Unit Size	P30	P40	P50	P60	P70	P80	P90	P100	P120	P140
		HP40	HP50	HP60	HP70	HP80	HP90	HP100	HP120	HP140
A"	3.638	3.74	4.309	4.719	4.94	4.938	5.5	6.75	6.75	6.93
B"	3.79	4.105	4.545	4.955	8.09	10.063	12.0	11.75	11.75	14.34
C"	1.573	1.905	1.896	2.076	2.345	2.50	2.75	3.75	3.75	3.73

P30 - P40 - P50 - P60

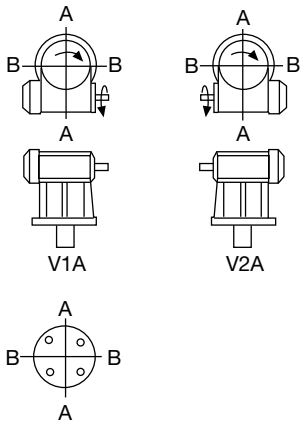

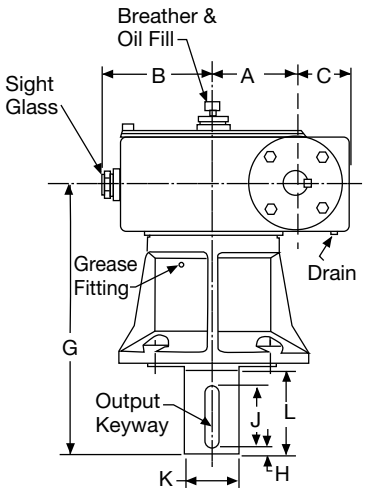

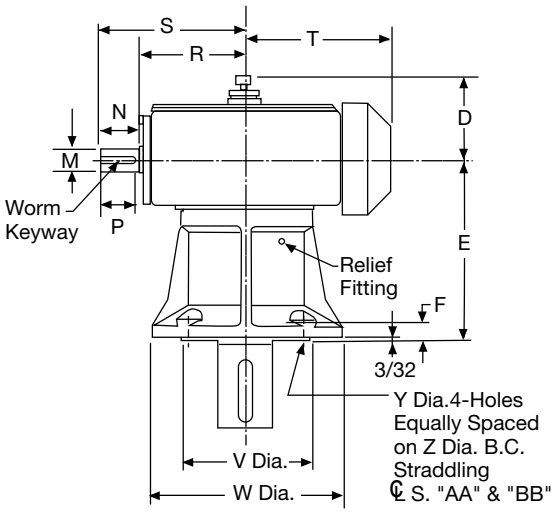

Unit Size	Reducer Wt.	A	B	C	D	E	F	G	H	J	Output Keyway	K▲	L	M▲	N	P	Worm Keyway	R	S	T	U	V■	W	Y	Z DIA. B.C.
P30	110	3	4 3/8	2 5/16	3 9/16	9	5/8	13 1/2	1/4	3	1/2 wide x 3/16 deep	1 15/16	4 1/4	7/8	1 7/8	1 13/16	3/16 wide x 3/32 deep	4 3/16	6 1/8	5 15/16	3 1/16	7.749	11 1/2	11/16	9 3/4
P40	170	4	5 1/2	2 7/8	3 7/8	9 3/4	1	15 1/4	3/8	3 3/4	3/4 wide x 1/4 deep	2 7/8	5 1/4	1 1/8	2 1/16	2	1/4 wide x 1/8 deep	5 11/16	7 3/4	7 3/4	3 9/16	7.749	11 1/2	11/16	9 3/4
P50	225	5	6 1/2	3 3/8	4 5/16	10 3/4	1 1/8	16 1/4	3/8	3 3/4	3/4 wide x 1/4 deep	3 1/8	5 1/4	1 3/8	2 5/16	2 1/4	5/16 wide x 5/32 deep	6 7/16	8 3/4	8 5/8	4 7/16	7.749	11 1/2	11/16	9 3/4
P60	350	6	7 3/4	3 7/8	4 13/16	11 3/4	1 1/4	17 1/2	3/8	3 7/8	7/8 wide x 5/16 deep	3 1/2	5 1/2	1 1/2	2 11/16	2 5/8	3/8 wide x 3/16 deep	7 3/4	10 1/4	10 1/16	5	7.749	11 1/2	11/16	9 3/4

■ Tolerances: +.000 -.002 ▲ Tolerances: 1 1/2 Diameter or less +.0000 -.0005 over 1 1/2 Diameter +.000 -.001

P70 - P80 - P90

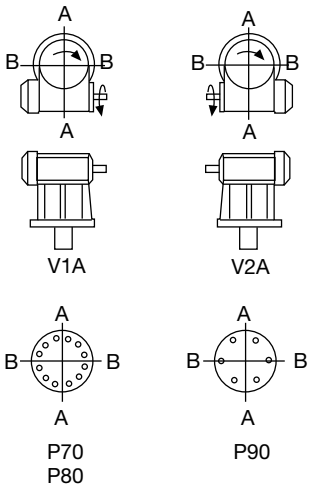

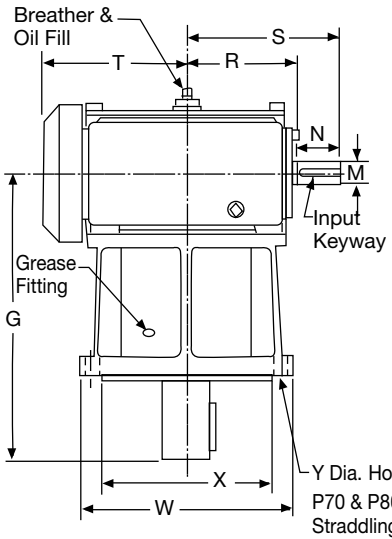

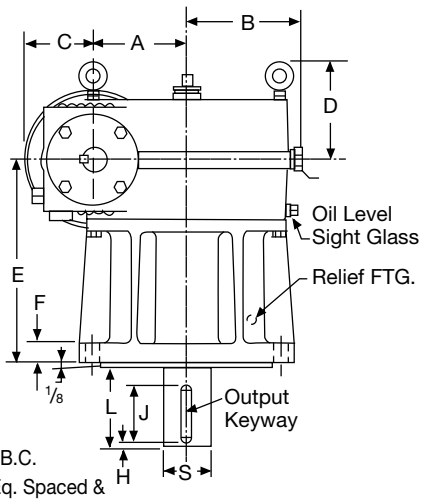

Y Dia. Holes on Z Dia. B.C.
P70 & P80: 12-Holes Eq. Spaced & Straddling A-A & B-B
P90: 6-Holes Eq. Spaced & Straddling A-A & B-B

Unit Size	Reducer Wt.	A	B	C	D	E	F	G	H	J	Output Keyway	K▲	L	M▲	N	Input Keyway	R	S	T	W	X■	Y	Z
P70	475	7	8 9/16	5 3/16	7 5/16	15 3/8	1 5/8	21 5/8	3/8	4 3/8	7/2 wide x 7/16 deep	3 1/2	6	1 5/8	3 1/8	3/8 x 3/16 x 3 1/16	8 1/2	11 1/2	10 3/4	16	12.749	1	14 1/4
P80	780	8	9 7/16	5 3/16	7 15/16	17 1/2	1 5/8	24 1/8	3/8	4 1/2	1 wide x 1/2 deep	4	8 3/8	1 7/8	3 1/8	1/2 x 1/4 x 3 1/16	9 1/2	12 1/2	11 3/4	16	12.749	1	14 1/4
P90	1100	9	10 3/8	6 3/16	8 15/16	20 1/4	1 5/8	27 1/4	3/8	4 3/4	1 1/4 wide x 5/8 deep	4 5/8	6 3/4	2 1/8	3 15/16	1/2 x 1/4 x 3 7/8	10 3/8	14 1/4	13 13/16	16	14.999	1	17

■ Tolerances: +.000 -.003 ▲ Tolerances: 1 1/2 Diameter or less +.0000 -.0005 over 1 1/2 Diameter +.000 -.001

P100 - P120 - P140

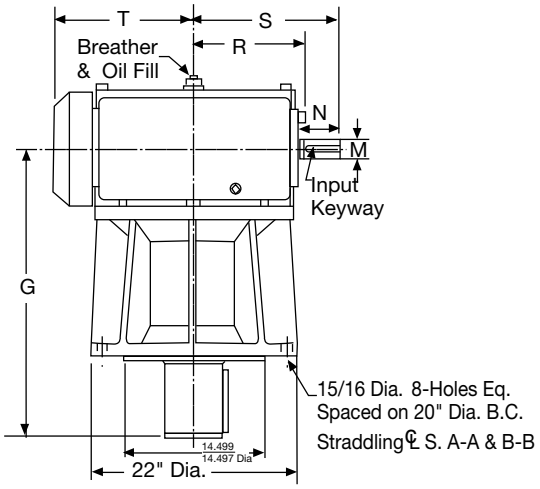

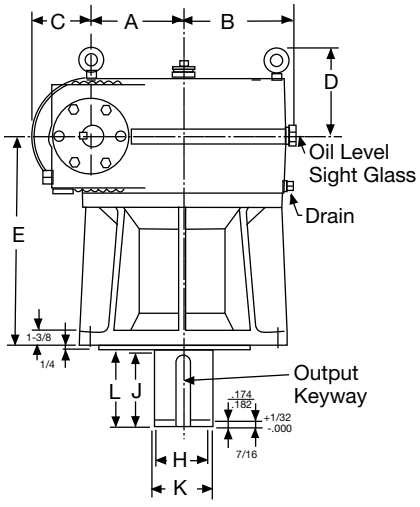

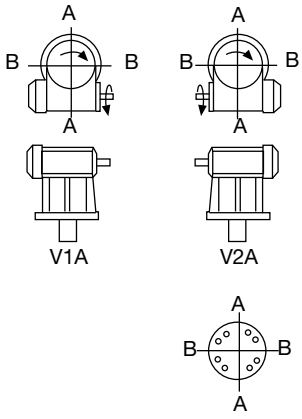

Unit Size	Reducer Wt.	A	B	C	D	E	G	H■	J	Output Keyway	K▲	L	M▲	N	Input Keyway	R	S	T
P100	1700	10	11 5/8	6 3/16	9 7/16	22 1/4	31	5.993	8 1/8	1 1/2 wide x 3/4 deep	6.250	8 1/4	2 1/4	4	1/2 x 1/4 x 3 15/16	11 13/16	15 1/2	15 1/8
P120	2150	12	13 1/2	6 3/16	10 3/16	22 1/4	31	5.993	8 1/8	1 1/2 wide x 3/4 deep	6.250	8 1/4	2 1/2	4 9/16	5/8 x 5/16 x 4 1/2	13 9/16	18	17
P140	2750	14	14 3/4	7 11/16	11 1/8	25	34 3/4	6.713	9	1 3/4 wide x 7/8 deep	7.000	9 1/8	3	5 5/8	3/4 x 3/8 x 5 5/8	15 1/2	21	20 11/16

■ Tolerance: +.000 -.014 ▲ Tolerance: +.000 -.001

HP40 - H50 - HP60

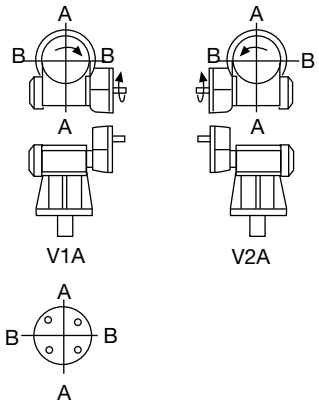

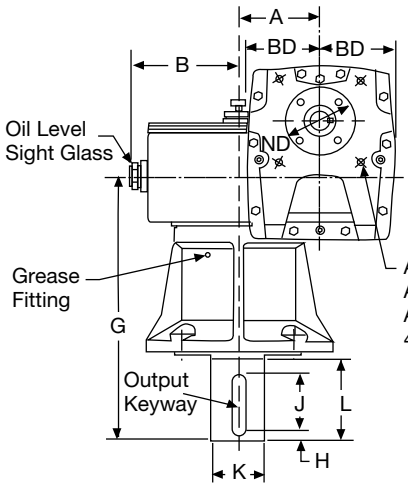

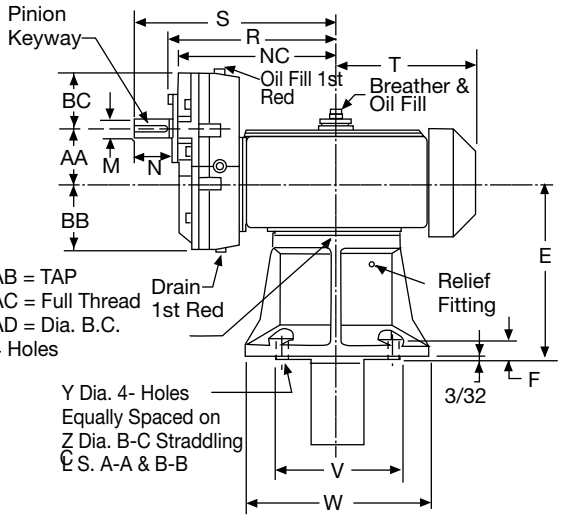

Helical Input Shaft Positions

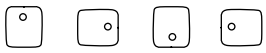

Unit Size	Reducer Wt.	A	AA	AB	AC	AD	B	BB	BC	BD	E	F	G	H	J	Output Keyway	K▲	L	M▲	Pinion Keyway	N	NC	ND	R	S	T	V■	W	Y	Z
HP40	215	4	3	3/8-16	5/8	5 3/4	5 1/2	3 1/2	2 7/8	4	9 3/4	1	15 1/4	3/8	3 3/4	3/4 wide x 1/4 deep	2 7/8	5 1/4	7/8	3/16 x 3/32 x 1 15/16	2	9 1/16	3 5/16	9 9/16	11 9/16	7 3/4	7.749	11 1/2	11/16	9 3/4
HP50	325	5	3 1/2	1/2-13	3/4	7 1/4	6 1/2	4	3 1/2	4 5/8	10 3/4	1 1/8	16 1/4	3/8	3 3/4	3/4 wide x 1/4 deep	3 1/8	5 1/4	1 1/8	1/4 x 1/8 x 2 3/16	2 1/4	9 7/8	4 1/4	10 3/8	12 5/8	8 5/8	7.749	11 1/2	11/16	9 3/4
HP60	410	6	4	1/2-13	3/4	7 1/4	7 3/4	4 3/4	3 5/8	5 1/2	11 3/4	1 1/4	17 1/2	3/8	3 7/8	7/8 wide x 5/16 deep	3 1/2	5 1/2	1 1/4	1/4 x 1/8 x 2 7/16	2 1/2	11 3/4	4 1/4	12 1/4	14 3/4	10 1/16	7.749	11 1/2	11/16	9 3/4

■ Tolerances: +.000 -.003 ▲ Tolerances: 1 1/2 Diameter or less +.0000 -.0005 over 1 1/2 Diameter +.000 -.001

HP70 - HP80 - HP90

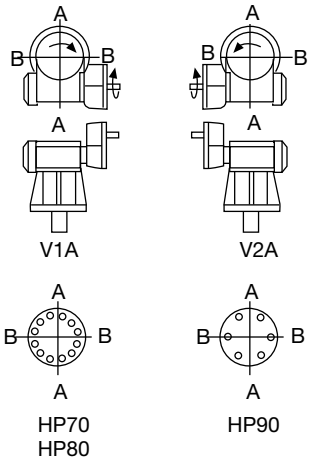

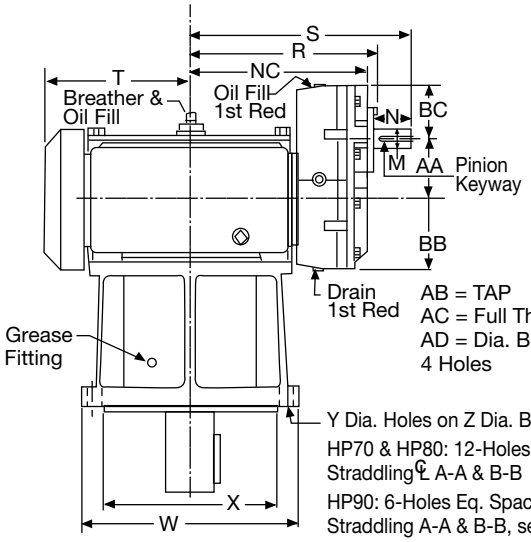

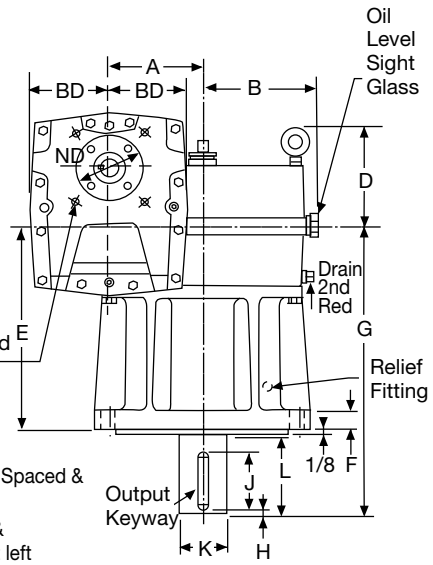

Helical Input Shaft Positions

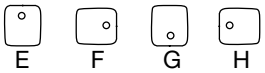

Unit Size	Reducer Wt.	A	AA	AB	AC	AD	B	BB	BC	BD	D	E	F	G	H	J	Output Keyway	K▲	L	M▲	N	Pinion Keyway	NC	ND	R	S	T	W	X■	Y	Z
HP70	670	7	4 1/2	1/2-13	3/4	7 1/4	8 9/16	5 1/8	4	5 7/8	7 5/16	15 3/8	1 5/4	21 5/8	3/8	4 3/8	7/8 wide x 7/16 deep	3 1/2	6	1 3/8	2 3/4	5/16 x 5/32 x 2 11/16	13 1/16	4 7/8	13 5/8	16 3/8	10 3/4	16	12.749	1	14 1/4
HP80	875	8	5	5/8-11	1	8 1/4	9 7/16	5 1/2	4 3/8	6 3/8	7 15/16	17 1/2	1 5/8	24 1/8	3/8	4 1/2	1 wide x 1/2 deep	4	6 3/8	1 1/2	3	3/8 x 3/16 x 2 15/16	14 7/16	5 3/4	15 1/16	18	11 3/4	16	12.749	1	14 1/4
HP90	1204	9	5 1/2	5/8-11	1	8 1/4	10 3/8	6 3/16	4 7/16	8 1/32	8 15/16	20 1/4	1 5/8	27 1/4	3/8	4 3/4	1 1/4 wide x 5/8 deep	4 5/8	6 3/4	1 3/4	3 1/2	3/8 x 3/16 x 3 7/16	16 1/16	5 3/4	16 11/16	20 1/8	13 13/16	19	14.999	1	17

■ Tolerances: +.000 -.003 ▲ Tolerances: 1 1/2 Diameter or less +.0000 -.0005 over 1 1/2 Diameter +.000 -.001

HP100 - HP120 - HP140

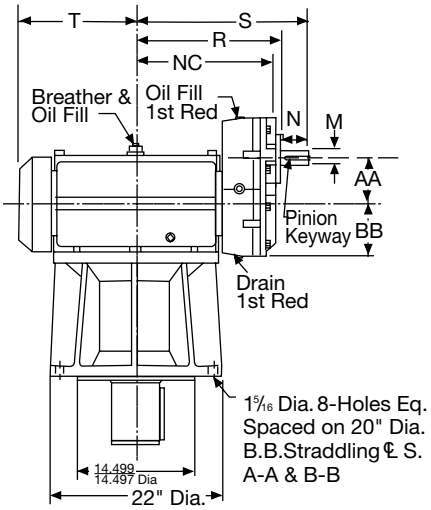

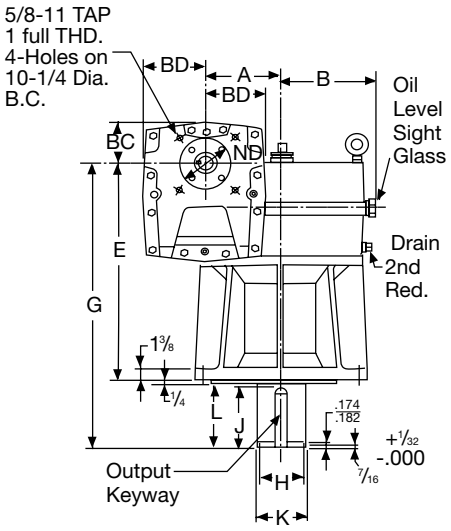

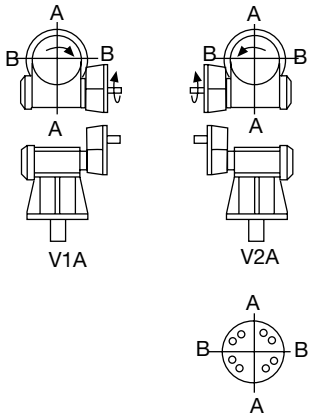

Helical Input Shaft Positions

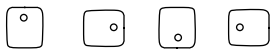

Unit Size	Reducer Wt.	A	AA	B	BB	BC	BD	E	G	H■	J	Output Keyway	K▲	L	M▲	N	Pinion Keyway	NC	ND	R	S	T
HP100	1890	10	6	11 5/8	6 1/2	5 1/4	7 5/8	28 1/4	37	5.993	8 1/8	1 1/2 wide x 3/4 deep	6.250	8 1/4	1 7/8	3 3/4	1/2 x 1/4 x 3 11/16	18	6 3/4	18 11/16	22 1/4	15 1/8
HP120	2150	12	7	13 1/2	7 5/16	5 11/16	8 3/4	29 1/4	38	5.993	8 1/8	1 1/2 wide x 3/4 deep	6.250	8 1/4	2 1/8	4 1/4	1/2 x 1/4 x 4 3/16	20 11/16	7	21 1/2	25 5/8	17
HP140	2995	14	7	14 3/4	7 5/16	5 11/16	8 3/4	32	41 3/4	6.713	9	1 5/4 wide x 7/8 deep	7.000	9 1/8	2 1/8	4 1/4	1/2 x 1/4 x 4 3/16	22 5/16	7	28 3/8	32 5/8	20 11/16

■ Tolerances: +.000 -.014 ▲ Tolerances: +.000 -.001

Other Models Available

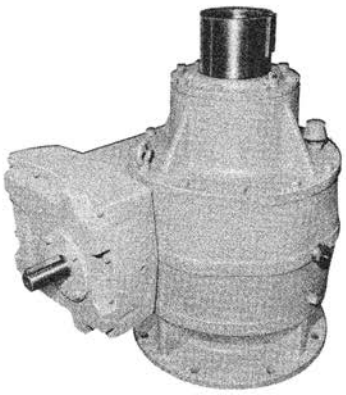

Helical Worm
HVFH100-S2

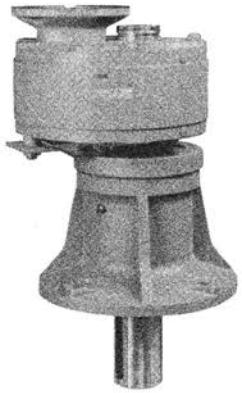

Helical
FPM40

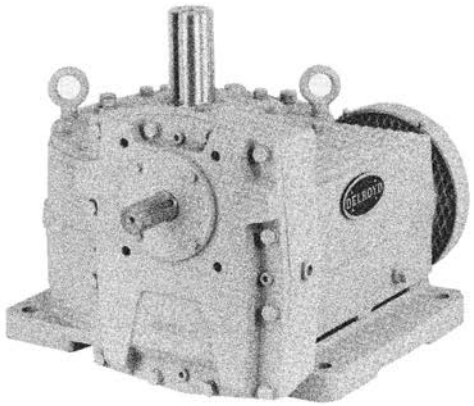

Helical Worm
HV80

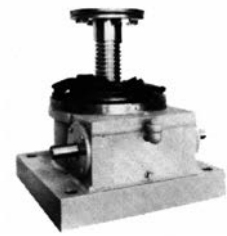

Screw Jack, 8" Center Distance

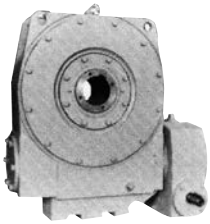

Straightener Drive 12" Center Distance

Hoist Drive 8" Center Distance, 35" Shaft

Fabricated Steel Pinch Roll Drives
12" Center Distance Between Shafts

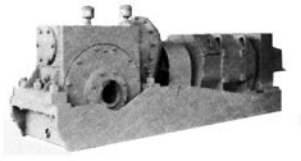

Stacker I Reclaimer Wheel Drive
12" Center Distance

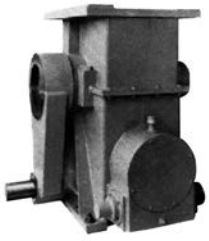

Paper Roll Drive 24" Center Distance

Delroyd Worm Gear®
Altra Industrial Motion

Need More Than a Standard Gearbox? Consider Delroyd

Delroyd Worm Gear Speed Reducers have been solving problems in power transmission that cannot be solved with a "catalog solution".

Custom Designs

Delroyd has the design and manufacturing capability to provide a custom speed reducer for your special application, be it a new project or a direct drop-in replacement for a competitor's speed reducer.

The use of fabricated steel reducers allow Delroyd to match a competitor's foot print, centerline, and shaft height allowing a direct drop-in replacement, saving the customer time and money.

Delroyd's unique design and manufacturing experience can provide you with any special worm gear speed reducer or set you may require.

Fabricated Designs

Whenever worm gear speed reducers may be subjected to severe shock loads or housing damage from external sources as in steel mills or mobile equipment applications, Delroyd can provide fabricated steel housings with up to 48" center distances, permitting transmission of higher horsepowers than are possible with the standard cast iron units.

The fabricated steel housing design provides maximum rigidity and strength for the application. The extra-heavy side plates connect the worm and gear shaft bearing supports, assuring proper meshing of the gear under all conditions of load.

In the smaller sizes, the fabricated steel reducers are interchangeable with Delroyd's standard cast iron reducers, per mounting dimensions and internal construction.

Delroyd Worm Gear Facilities

North America

USA
2221 Niagara Falls Boulevard
Niagara Falls, NY 14304 - USA
716-298-4100
Worm Gear and
Helical Speed Reducers

The Brands of Altra Industrial Motion

Couplings

Ameridrives
www.ameridrives.com

Bibby Turboflex
www.bibbyturboflex.com

Guardian Couplings
www.guardiancouplings.com

Huco
www.huco.com

Lamiflex Couplings
www.lamiflexcouplings.com

Stromag
www.stromag.com

TB Wood's
www.tbwoods.com

Geared Cam Limit Switches

Stromag
www.stromag.com

Electric Clutches & Brakes

Inertia Dynamics
www.idicb.com

Matrix
www.matrix-international.com

Stromag
www.stromag.com

Warner Electric
www.warnerelectric.com

Linear Products

Warner Linear
www.warnerlinear.com

Engineered Bearing Assemblies

Kilian
www.kilianbearings.com

Heavy Duty Clutches & Brakes

Industrial Clutch
www.indclutch.com

Twiflex
www.twiflex.com

Stromag
www.stromag.com

Svendborg Brakes
www.svendborg-brakes.com

Wichita Clutch
www.wichitaclutch.com

Belted Drives

TB Wood's
www.tbwoods.com

Gearing

Bauer Gear Motor
www.bauergears.com

Boston Gear
www.bostongear.com

Delroyd Worm Gear
www.delroyd.com

Nuttall Gear
www.nuttallgear.com

Overrunning Clutches

Formsprag Clutch
www.formsprag.com

Marland Clutch
www.marland.com

Stieber
www.stieberclutch.com

Neither the accuracy nor completeness of the information contained in this publication is guaranteed by the company and may be subject to change in its sole discretion. The operating and performance characteristics of these products may vary depending on the application, installation, operating conditions and environmental factors. The company's terms and conditions of sale can be viewed at http://www.altramotion.com/terms-and-conditions/sales-terms-and-conditions. These terms and conditions apply to any person who may buy, acquire or use a product referred to herein, including any person who buys from a licensed distributor of these branded products.

©2018 by Delroyd Worm Gear LLC. All rights reserved. All trademarks in this publication are the sole and exclusive property of Delroyd Worm Gear LLC or one of its affiliated companies.

Delroyd Worm Gear®
Altra Industrial Motion