Elektrim® Premium Efficient Motors

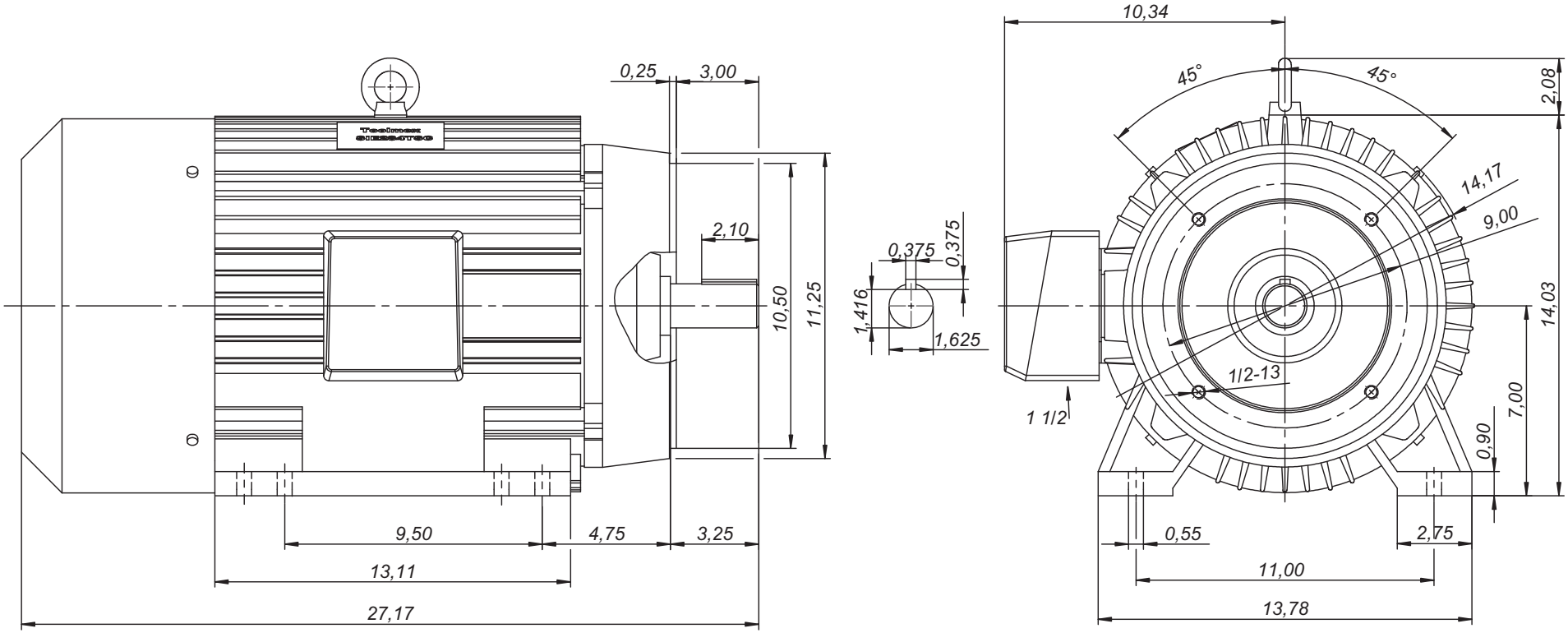

284TSC C-Face