mayr®

your reliable partner

EAS®-axial

Overload protection for linear movements

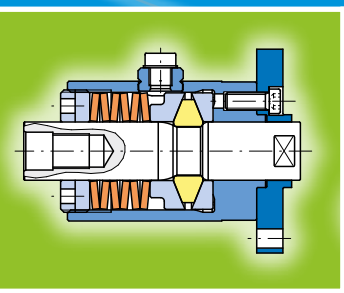

K.403.C.V09.EN

www.mayr®.com

EAS®-axial – Two-directional overload protection

- Limits tensile and compressive forces.
- High quality materials, hardened functional components and superior manufacturing precision guarantee excellent repetitive accuracy of the set force and increase the service lifetime.
- Backlash-free force transmission with high axial rigidity.
- Immediate force interruption in the event of overload.
- Stepless adjustment of the release force.
- Free stroke in both tensile and compressive direction can be defined by the user.
- EAS®-axial with integrated limit switch emits a signal in case of overload occurrence, which can be used to shut down the drive.
- By using an EAS®-axial and a cycle monitor, cycle frequencies can be monitored and controlled.
- **Force limitation for linear movements, e.g. crank mechanisms.**
- **As torque support, e.g. in manufacturing gearbox.**
- **In cam-controlled feed drives.**

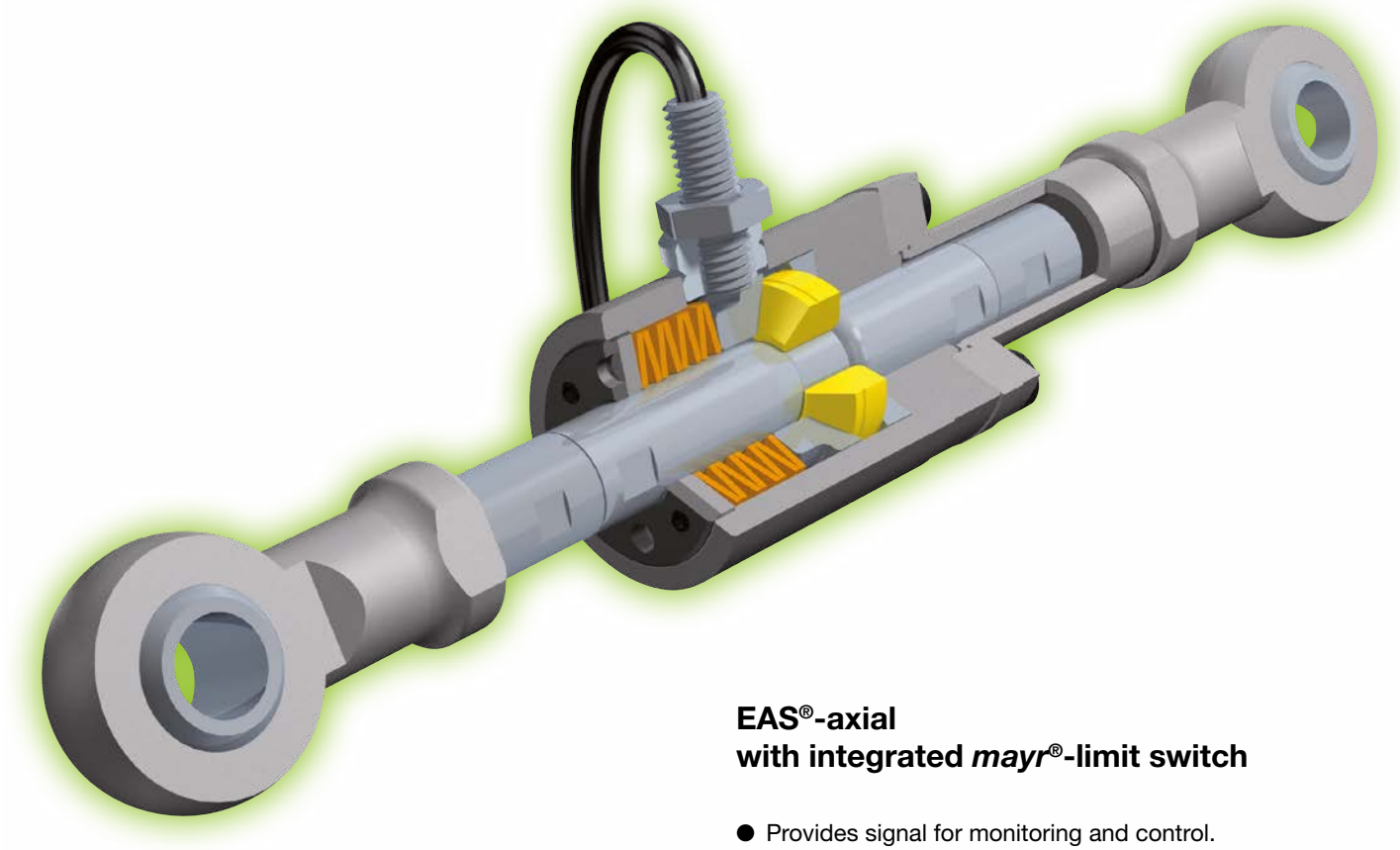

EAS®-axial with integrated *mayr*®-limit switch

- Provides signal for monitoring and control.
- In case of overload occurrence, the limit switch switches off the drive or initiates further control functions.
- Contactless monitoring system.
- Flexible installation of the EAS®-axial.
- Direct signal evaluation.
- Secured against cable breakage via PNP NC contact.
- Short constructional design, therefore compact overall dimensions.

EAS®-axial with cycle monitoring system

- Provides signal for monitoring and control.
- In case of overload occurrence, the signal can also be used to switch off the drive.

Operating principle of the EAS®-axial

- If the pre-set tensile or compressive forces are exceeded, the EAS®-axial disengages in the respective direction.
- The release force is individually adjustable via an adjusting ring and *mayr*®-cup springs.
- In case of overload occurrence, the bolt carries out an axial stroke and moves the switching segments radially outward. The force transmission is then interrupted.
- Re-engagement takes place manually or automatically.

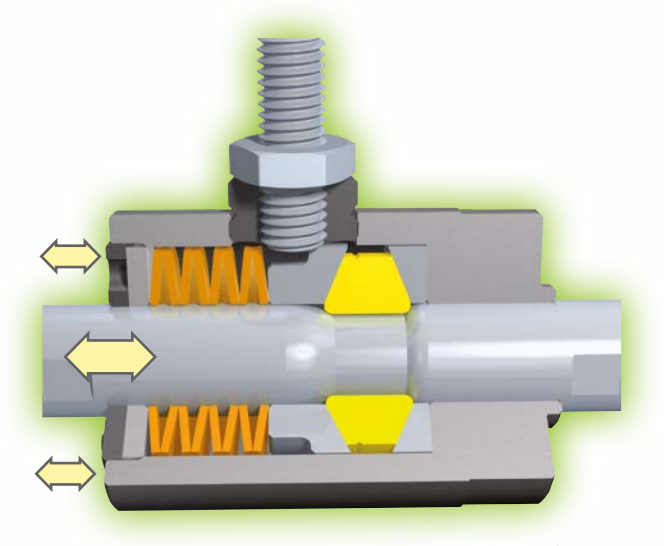

engaged

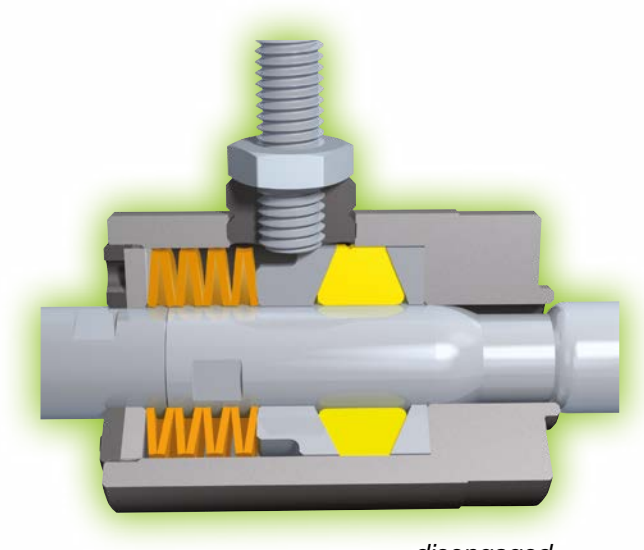

disengaged

Installation Example

In a crank mechanism, various forces have an effect on the connecting rod. Extremely high forces can occur at the top or bottom dead center of the crank, in spite of torque limitation, and can therefore cause damage without a torque limiting clutch reacting.

By using an EAS®-axial, it is guaranteed that the force acting on the connecting rod – independent of the position of the crank – does not exceed a certain set value.

EAS®-axial in a cam-controlled feed drive, for example a transfer line.

In case of overload occurrence, the EAS®-axial disengages and limits the force to the set value.

The connecting rod telescopes into the EAS®-axial. During reversal, the spring pulls the connecting rod back. The EAS®-axial engages and is ready for operation again automatically.

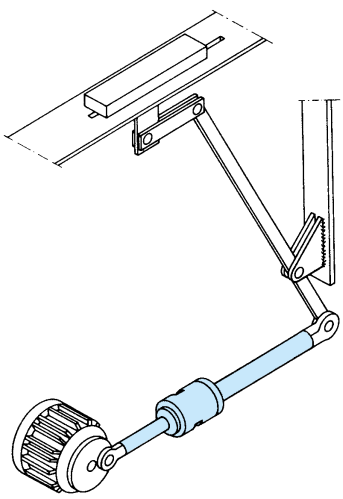

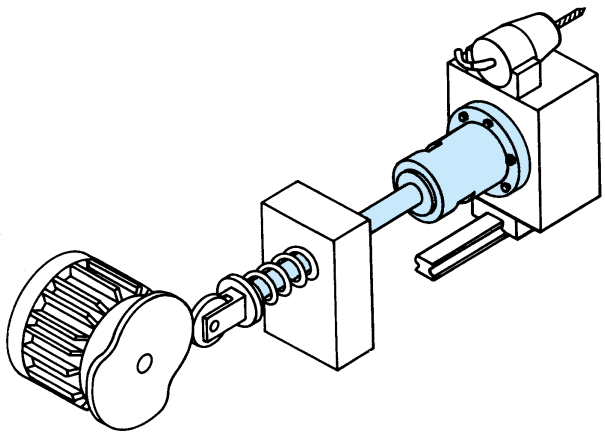

Summary of constructional designs EAS®-axial

Basic element 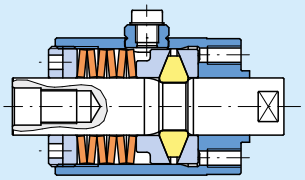	Release force: 75 to 300 000 N Sizes 1 to 8 Type 300._ _0	• Overload protection for linear movements. • High axial rigidity. • Backlash-free design. • Rapid force drop. • Overload can be signalled via a contactless limit switch. **Page 6**
Mounting flange design 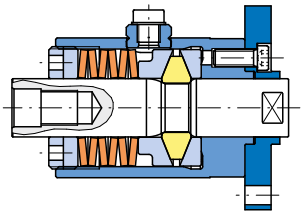	Release force: 75 to 300 000 N Sizes 1 to 8 Type 320._ _0	• Force transmitted via bolts and mounting flange. • Free strokes in tensile and / or compressive directions can be varied via customer-supplied attachment parts. • Application example: feed carriages. **Page 7**
Basic element with sleeve 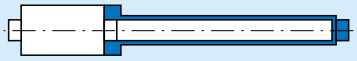	Release force: 75 to 300 000 N Sizes 1 to 8 Type 310._ _0	• Force transmitted via bolt and threaded end of sleeve. • Free strokes in compressive directions can be varied via customer-supplied attachment parts up to a maximum limited by the sleeve length. • Sleeve length according to customer's request, dependent on the reduced length. **Page 8**
Basic element with connecting rod 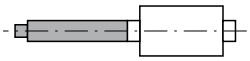	Release force: 75 to 300 000 N Sizes 1 to 8 Type 301._ _0	• Force transmitted via connecting rod and tapped hole on the housing. • Connecting rod length is suitable for accommodating the free stroke in compressive direction based on the customer's application. **Page 9**
Mounting flange design with connecting rod 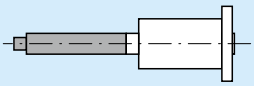	Release force: 75 to 300 000 N Sizes 1 to 8 Type 321._ _0	• Force transmitted via connecting rod and mounting flange. • Connecting rod length is suitable for accommodating the free stroke in compressive direction based on the customer's application. **Page 10**
Basic element with connecting rod and sleeve 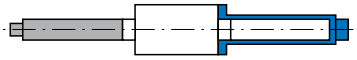	Release force: 75 to 300 000 N Sizes 1 to 8 Type 311._ _0	• Force transmitted via connecting rod and sleeve-side threaded pin. • Both connecting rod and sleeve length are suitable for accommodating the free stroke in compressive direction based on the customer's application. **Page 11**

Summary of constructional designs EAS®-axial

Basic element with guide rod 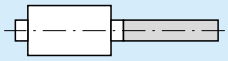	Release force: 75 to 300 000 N Sizes 1 to 8 Type 302._ _0	• Force transmitted via bolt and tapped hole on the housing. • Guide rod length is suitable for accommodating the free stroke in tensile direction based on the customer's application. **Page 12**
Mounting flange design with guide rod 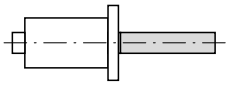	Release force: 75 to 300 000 N Sizes 1 to 8 Type 322._ _0	• Force transmitted via bolts and mounting flange. • Guide rod length is suitable for accommodating the free stroke in tensile direction based on the customer's application. **Page 13**
Basic element with guide rod and sleeve 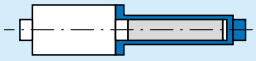	Release force: 75 to 300 000 N Sizes 1 to 8 Type 312._ _0	• Force transmitted via bolt and sleeve-side threaded pin. • Both guide rod and sleeve length are suitable for accommodating the free stroke in tensile direction based on the customer's application. **Page 14**
Basic element with connecting rod and guide rod 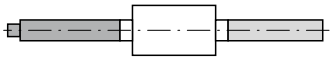	Release force: 75 to 300 000 N Sizes 1 to 8 Type 303._ _0	• Force transmitted via connecting rod and tapped hole on the housing. • Both connecting rod and guide rod length are suitable for accommodating the free stroke in tensile and compressive direction based on the customer's application. **Page 15**
Mounting flange design with connecting rod and guide rod 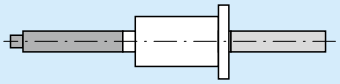	Release force: 75 to 300 000 N Sizes 1 to 8 Type 323._ _0	• Force transmitted via connecting rod and mounting flange. • Both connecting rod and guide rod length are suitable for accommodating the free stroke in tensile and compressive direction based on the customer's application. **Page 16**
Basic element with connecting rod, guide rod and sleeve 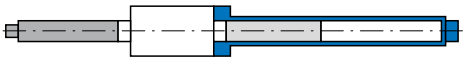	Release force: 75 to 300 000 N Sizes 1 to 8 Type 313._ _0	• Force transmitted via connecting rod and sleeve-side threaded pin. • Connecting rod, guide rod and sleeve length are suitable for accommodating the free stroke in tensile and compressive direction based on the customer's application. • Application example: crank mechanisms. **Page 17**
Length Dimensioning		**Page 18**
Technical Explanations		**Page 20**

According to German notation, decimal points in this catalogue are represented with a comma (e.g. 0,5 instead of 0.5).

Basic element

Type 300._ _0
Sizes 1 to 8

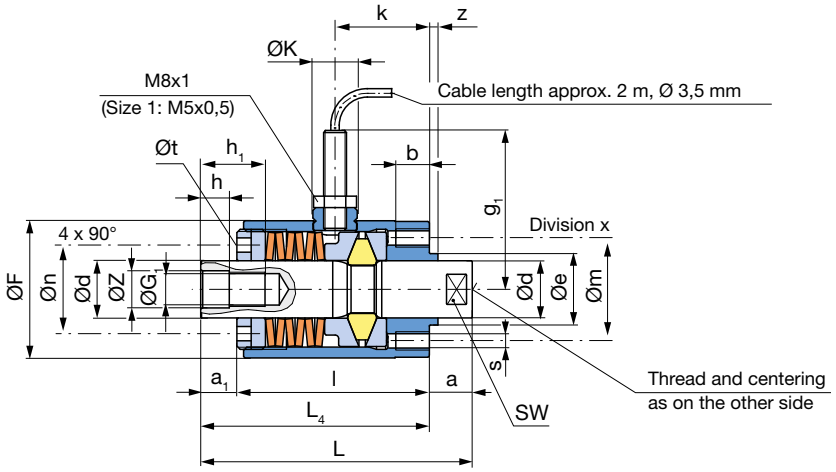

We reserve the right to make dimensional and constructional alterations.

Technical Data				Size 1	2	3	4	5	6	7	8
Release forces [1]	Type 300.4_0	F_A	[kN]	0,075 – 0,2	0,2 – 0,5	0,3 – 0,6	0,6 – 2	3 – 7,5	6 – 12	12 – 30	30 – 70
	Type 300.5_0	F_A	[kN]	0,2 – 0,5	0,5 – 0,8	0,6 – 2	2 – 6	6 – 12	12 – 30	30 – 70	70 – 150
	Type 300.6_0	F_A	[kN]	0,3 – 0,8	0,8 – 2	2 – 5	6 – 12	12 – 30	30 – 70	70 – 150	150 – 300
Free stroke [2]	$H_{1\,max}$, $H_{2\,max}$		[mm]	200	300	400	500	600	700	800	1000
Weight			[kg]	0,175	0,377	0,877	2,45	7,14	12,9	35,6	105,4

Dimensions [mm]	Size 1	2	3	4	5	6	7	8
a	8	12	15	20	32,5	35	50	65
a_1	6	10	10	15	15	15	25	30
b	7	10	12	15	20	22	35	50
d_{h9}	10	14	20	30	40	50	70	100
e_{f7}	14	18	25	35	50	60	85	120
F	30	37	48	68	95	120	160	240
G_1	M6 x 0,75	M10 x 0,75	M12 x 1,0	M20 x 1,0	M24 x 1,5	M30 x 1,5	M48 x 2,0	M75 x 2,0
g_1	41,5	49,5	55,5	65,5	75,5	85,5	98	136
h	5	9	10	15	20	25	35	50
h_1	12	18	22	32	42	53	73	103
K	15,5	15,5	15,5	15,5	-	-	-	-
k	18	30	33	44	59	74	114	163
L	52	75	95	130	190	230	350	460
L_4	44	63	80	110	157,5	195	300	395
l	38	53	70	95	142,5	180	275	365
m	22	28	37	52	72	90	130	180
n	17	22	31	48	69	90	115	170
s	M3	M5	M6	M8	M10	M12	M16	M24
t	3	4	5	6	8	8	8	10
x	6 x 60°	6 x 60°	6 x 60°	6 x 60°	6 x 60°	6 x 60°	6 x 60°	6 x 60°
Z^{H7}_{h7}	7	11	13	22	28	36	52	78
z	2	2	3	4	6	8	10	15
SW	9	13	17	27	36	46	65	90

Order Number

__ / 3 0 0 . __ __ 0

Sizes	Release force [4]		Limit switch	
1 to 8	Low	4	0	Without limit switch [3]
	Medium	5	1	With integrated limit switch
	High	6		

Example: Order number 2 / 300.600

1) Additional sizes for lower or higher release forces on request.
Re-engagement force = 20 – 25 % of the release force.
2) $H_{1\,max}$: free stroke in tensile direction; $H_{2\,max}$: free stroke in compressive direction
(larger free strokes on request)
3) EAS®-axial without limit switch – delivery with bushing (M8 or M5)
4) See Technical Data, release forces F_A

Mounting flange design

Type 320._ _0
Sizes 1 to 8

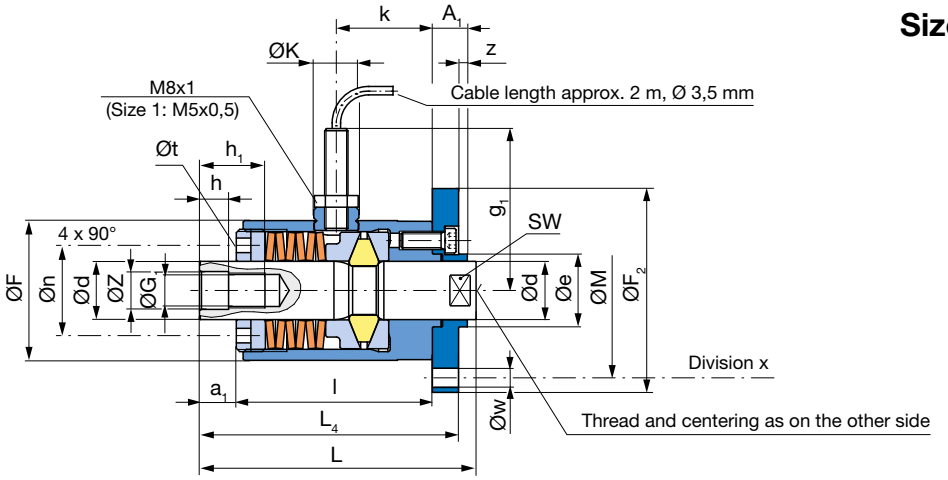

We reserve the right to make dimensional and constructional alterations.

Technical Data				Size 1	2	3	4	5	6	7	8
Release forces [1]	Type 320.4_0	F_A	[kN]	0,075 – 0,2	0,2 – 0,5	0,3 – 0,6	0,6 – 2	3 – 7,5	6 – 12	12 – 30	30 – 70
	Type 320.5_0	F_A	[kN]	0,2 – 0,5	0,5 – 0,8	0,6 – 2	2 – 6	6 – 12	12 – 30	30 – 70	70 – 150
	Type 320.6_0	F_A	[kN]	0,3 – 0,8	0,8 – 2	2 – 5	6 – 12	12 – 30	30 – 70	70 – 150	150 – 300
Free stroke [2]	$H_{1\,max}$, $H_{2\,max}$		[mm]	200	300	400	500	600	700	800	1000
Weight			[kg]	0,225	0,487	1,087	2,9	8,31	15,8	42,0	124,9

Dimensions [mm]	Size 1	2	3	4	5	6	7	8
A_1	8	10	12	15	21	30	40	55
a_1	6	10	10	15	15	15	25	30
d_{h9}	10	14	20	30	40	50	70	100
e_{f7}	14	18	25	35	50	60	85	120
F	30	37	48	68	95	120	160	240
F_2	42	55	70	95	128	158	210	316
G_1	M6 x 0,75	M10 x 0,75	M12 x 1,0	M20 x 1,0	M24 x 1,5	M30 x 1,5	M48 x 2,0	M75 x 2,0
g_1	41,5	49,5	55,5	65,5	75,5	85,5	98	136
h	5	9	10	15	20	25	35	50
h_1	12	18	22	32	42	53	73	103
K	15,5	15,5	15,5	15,5	-	-	-	-
k	18	30	33	44	59	74	114	163
L	52	75	95	130	190	230	350	460
L_4	50	71	89	121	172,5	217	330	435
l	38	53	70	95	142,5	180	275	365
M	36	46	60	82	112	140	186	280
n	17	22	31	48	69	90	115	170
t	3	4	5	6	8	8	8	10
w	3,4	5,5	6,6	9	11	13,5	17,5	26
x	6 x 60°	6 x 60°	6 x 60°	6 x 60°	6 x 60°	6 x 60°	6 x 60°	6 x 60°
Z^{H7}_{h7}	7	11	13	22	28	36	52	78
z	2	2	3	4	6	8	10	15
SW	9	13	17	27	36	46	65	90

Order Number

__ / 3 2 0 . __ __ 0

Sizes	Release force [4]		Limit switch	
1	Low	4	0	Without limit switch [3]
to	Medium	5	1	With integrated
8	High	6		limit switch

Example: Order number 1 / 320.510

1) Additional sizes for lower or higher release forces on request.
Re-engagement force = 20 – 25 % of the release force.
2) $H_{1\,max}$: free stroke in tensile direction; $H_{2\,max}$: free stroke in compressive direction
(larger free strokes on request)
3) EAS®-axial without limit switch – delivery with bushing (M8 or M5)
4) See Technical Data, release forces F_A

Basic element with sleeve

Type 310._ _0
Sizes 1 to 8

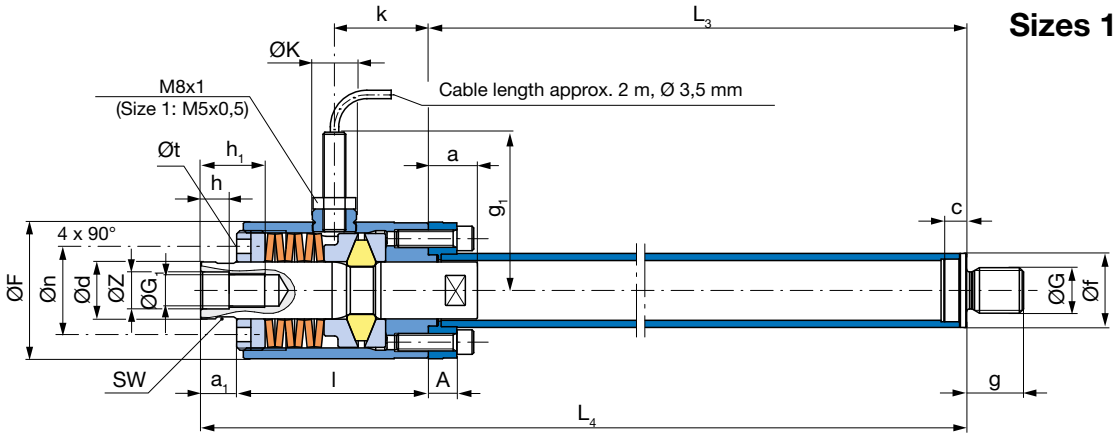

We reserve the right to make dimensional and constructional alterations.

Technical Data				Size 1	2	3	4	5	6	7	8
Release forces [1]	Type 310.4_0	F_A	[kN]	0,075 – 0,2	0,2 – 0,5	0,3 – 0,6	0,6 – 2	3 – 7,5	6 – 12	12 – 30	30 – 70
	Type 310.5_0	F_A	[kN]	0,2 – 0,5	0,5 – 0,8	0,6 – 2	2 – 6	6 – 12	12 – 30	30 – 70	70 – 150
	Type 310.6_0	F_A	[kN]	0,3 – 0,8	0,8 – 2	2 – 5	6 – 12	12 – 30	30 – 70	70 – 150	150 – 300
Free stroke [2]	$H_{1\,max}$, $H_{2\,max}$		[mm]	200	300	400	500	600	700	800	1000

Dimensions [mm]	Size 1	2	3	4	5	6	7	8
A	7	8	10	12	15	22	32	44
a	8	12	15	20	32,5	35	50	65
a_1	6	10	10	15	15	15	25	30
c	5	6	8	10	12,5	16	20	26
d_{h9}	10	14	20	30	40	50	70	100
F	30	37	48	68	95	120	160	240
f	14	19	26	38	55	70	95	130
G	M8	M12	M16	M24 x 2,0	M30 x 2,0	M36 x 3,0	M52 x 3,0	M64 x 4,0
G_1	M6 x 0,75	M10 x 0,75	M12 x 1,0	M20 x 1,0	M24 x 1,5	M30 x 1,5	M48 x 2,0	M75 x 2,0
g	10	15	20	30	35	42	50	60
g_1	41,5	49,5	55,5	65,5	75,5	85,5	98	136
h	5	9	10	15	20	25	35	50
h_1	12	18	22	32	42	53	73	103
K	15,5	15,5	15,5	15,5	-	-	-	-
k	18	30	33	44	59	74	114	163
L_3	Length depends on free stroke in tensile and							
L_4	compressive directions, for calculation please see pages 18/19							
l	38	53	70	95	142,5	180	275	365
n	17	22	31	48	69	90	115	170
t	3	4	5	6	8	8	8	10
Z^{H7}_{h7}	7	11	13	22	28	36	52	78
SW	9	13	17	27	36	46	65	90

Order Number

__ / 3 1 0 . __ __ 0 / __

Sizes	Release force [4]		Limit switch		L_3
1 to 8	Low	4	0	Without limit switch [3]	Length of the sleeve
	Medium	5	1	With integrated limit switch	Calculations according to "Length Dimensioning", see Technical Data, pages 18/19
	High	6			

Example: Order number 2 / 310.400 / L_3 = 210

1) Additional sizes for lower or higher release forces on request. Re-engagement force = 20 – 25 % of the release force.

2) $H_{1\,max}$: free stroke in tensile direction; $H_{2\,max}$: free stroke in compressive direction (larger free strokes on request)

3) EAS®-axial without limit switch – delivery with bushing (M8 or M5)

4) See Technical Data, release forces F_A

Basic element with connecting rod

Type 301._ _0
Sizes 1 to 8

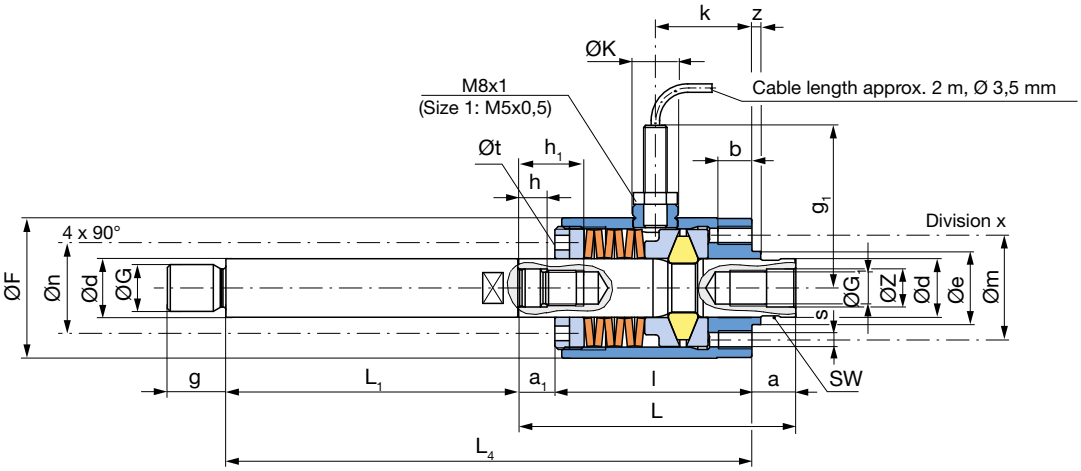

We reserve the right to make dimensional and constructional alterations.

Technical Data				Size 1	2	3	4	5	6	7	8
Release forces [1]	Type 301.4_0	F_A	[kN]	0,075 – 0,2	0,2 – 0,5	0,3 – 0,6	0,6 – 2	3 – 7,5	6 – 12	12 – 30	30 – 70
	Type 301.5_0	F_A	[kN]	0,2 – 0,5	0,5 – 0,8	0,6 – 2	2 – 6	6 – 12	12 – 30	30 – 70	70 – 150
	Type 301.6_0	F_A	[kN]	0,3 – 0,8	0,8 – 2	2 – 5	6 – 12	12 – 30	30 – 70	70 – 150	150 – 300
Free stroke [2]	$H_{2\ max}$		[mm]	200	300	400	500	600	700	800	1000

Dimensions [mm]	Size 1	2	3	4	5	6	7	8
a	8	12	15	20	32,5	35	50	65
a_1	6	10	10	15	15	15	25	30
b	7	10	12	15	20	22	35	50
d_{h9}	10	14	20	30	40	50	70	100
e_{f7}	14	18	25	35	50	60	85	120
F	30	37	48	68	95	120	160	240
G	M8	M12	M16	M24 x 2	M30 x 2	M36 x 3	M52 x 3	M64 x 4
G_1	M6 x 0,75	M10 x 0,75	M12 x 1,0	M20 x 1,0	M24 x 1,5	M30 x 1,5	M48 x 2,0	M75 x 2,0
g	10	15	20	30	35	42	50	60
g_1	41,5	49,5	55,5	65,5	75,5	85,5	98	136
h	5	9	10	15	20	25	35	50
h_1	12	18	22	32	42	53	73	103
K	15,5	15,5	15,5	15,5	-	-	-	-
k	18	30	33	44	59	74	114	163
L	52	75	95	130	190	230	350	460
L_1	Length depends on free stroke in tensile and							
L_4	compressive directions, for calculation please see pages 18/19							
l	38	53	70	95	142,5	180	275	365
m	22	28	37	52	72	90	130	180
n	17	22	31	48	69	90	115	170
s	M3	M5	M6	M8	M10	M12	M16	M24
t	3	4	5	6	8	8	8	10
x	6 x 60°	6 x 60°	6 x 60°	6 x 60°	6 x 60°	6 x 60°	6 x 60°	6 x 60°
Z^{H7}_{h7}	7	11	13	22	28	36	52	78
z	2	2	3	4	6	8	10	15
SW	9	13	17	27	36	46	65	90

Order Number

__ / 3 0 1 . __ __ 0 / __

Sizes	Release force [4]		Limit switch		L_1
1 to 8	Low	4	0	Without limit switch [3]	Length of the connecting rod
	Medium	5	1	With integrated limit switch	Calculations according to "Length Dimensioning", see Technical Data, pages 18/19
	High	6			

Example: Order number 1 / 301.400 / L_1 = 150

1) Additional sizes for lower or higher release forces on request. Re-engagement force = 20 – 25 % of the release force.

2) $H_{2\ max}$: free stroke in compressive direction (larger free strokes on request)

3) EAS®-axial without limit switch – delivery with bushing (M8 or M5)

4) See Technical Data, release forces F_A

Mounting flange design with connecting rod

Type 321._ _0
Sizes 1 to 8

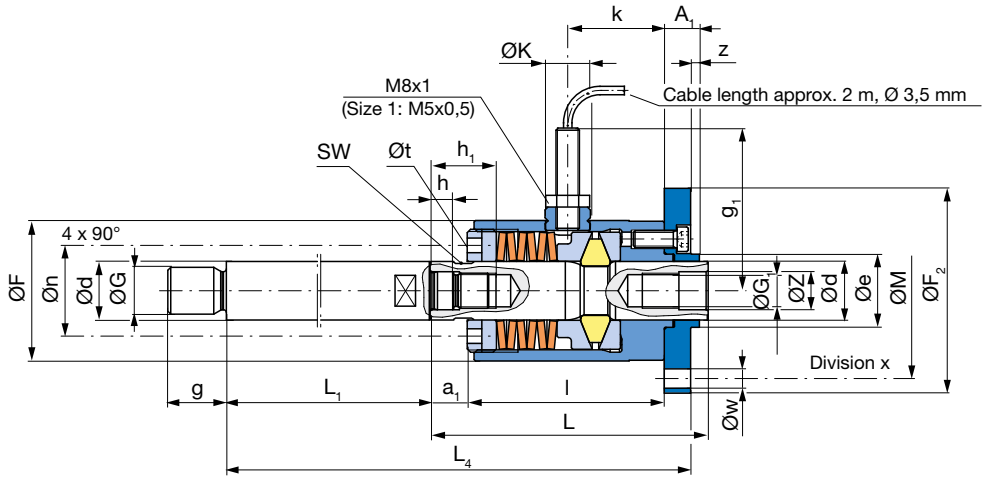

We reserve the right to make dimensional and constructional alterations.

Technical Data				Size 1	2	3	4	5	6	7	8
Release forces [1]	Type 321.4_0	F_A	[kN]	0,075 – 0,2	0,2 – 0,5	0,3 – 0,6	0,6 – 2	3 – 7,5	6 – 12	12 – 30	30 – 70
	Type 321.5_0	F_A	[kN]	0,2 – 0,5	0,5 – 0,8	0,6 – 2	2 – 6	6 – 12	12 – 30	30 – 70	70 – 150
	Type 321.6_0	F_A	[kN]	0,3 – 0,8	0,8 – 2	2 – 5	6 – 12	12 – 30	30 – 70	70 – 150	150 – 300
Free stroke [2]	$H_{2\ max}$		[mm]	200	300	400	500	600	700	800	1000

Dimensions [mm]	Size 1	2	3	4	5	6	7	8
A_1	8	10	12	15	21	30	40	55
a_1	6	10	10	15	15	15	25	30
d_{h9}	10	14	20	30	40	50	70	100
e_{f7}	14	18	25	35	50	60	85	120
F	30	37	48	68	95	120	160	240
F_2	42	55	70	95	128	158	210	316
G	M8	M12	M16	M24 x 2	M30 x 2	M36 x 3	M52 x 3	M64 x 4
G_1	M6 x 0,75	M10 x 0,75	M12 x 1,0	M20 x 1,0	M24 x 1,5	M30 x 1,5	M48 x 2,0	M75 x 2,0
g	10	15	20	30	35	42	50	60
g_1	41,5	49,5	55,5	65,5	75,5	85,5	98	136
h	5	9	10	15	20	25	35	50
h_1	12	18	22	32	42	53	73	103
K	15,5	15,5	15,5	15,5	-	-	-	-
k	18	30	33	44	59	74	114	163
L	52	75	95	130	190	230	350	460
L_1	Length depends on free stroke in tensile and compressive directions,							
L_4	for calculation please see pages 18/19							
l	38	53	70	95	142,5	180	275	365
M	36	46	60	82	112	140	186	280
n	17	22	31	48	69	90	115	170
t	3	4	5	6	8	8	8	10
w	3,4	5,5	6,6	9	11	13,5	17,5	26
x	6 x 60°	6 x 60°	6 x 60°	6 x 60°	6 x 60°	6 x 60°	6 x 60°	6 x 60°
Z^{H7}_{h7}	7	11	13	22	28	36	52	78
z	2	2	3	4	6	8	10	15
SW	9	13	17	27	36	46	65	90

Order Number

__ / 3 2 1 . __ __ 0 / __

Sizes	Release force [4]		Limit switch		L_1
1 to 8	Low Medium High	4 5 6	0 1	Without limit switch [3] With integrated limit switch	Length of the connecting rod Calculations according to "Length Dimensioning", see Technical Data, pages 18/19

Example: Order number 4 / 321.600 / L_1 = 320

1) Additional sizes for lower or higher release forces on request. Re-engagement force = 20 – 25 % of the release force.

2) $H_{2\ max}$: free stroke in compressive direction (larger free strokes on request)

3) EAS®-axial without limit switch – delivery with bushing (M8 or M5)

4) See Technical Data, release forces F_A

Basic element with connecting rod and sleeve

Type 311._ _0
Sizes 1 to 8

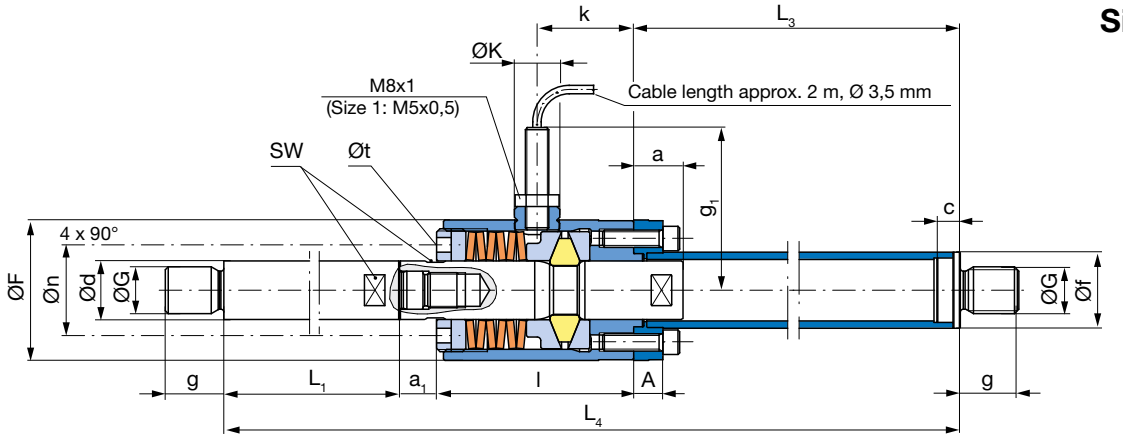

We reserve the right to make dimensional and constructional alterations.

Technical Data				Size							
				1	2	3	4	5	6	7	8
Release forces [1]	Type 311.4_0	F_A	[kN]	0,075 – 0,2	0,2 – 0,5	0,3 – 0,6	0,6 – 2	3 – 7,5	6 – 12	12 – 30	30 – 70
	Type 311.5_0	F_A	[kN]	0,2 – 0,5	0,5 – 0,8	0,6 – 2	2 – 6	6 – 12	12 – 30	30 – 70	70 – 150
	Type 311.6_0	F_A	[kN]	0,3 – 0,8	0,8 – 2	2 – 5	6 – 12	12 – 30	30 – 70	70 – 150	150 – 300
Free stroke [2]	$H_{2\ max}$		[mm]	200	300	400	500	600	700	800	1000

Dimensions [mm]	Size							
	1	2	3	4	5	6	7	8
A	7	8	10	12	15	22	32	44
a	8	12	15	20	32,5	35	50	65
a_1	6	10	10	15	15	15	25	30
c	5	6	8	10	12,5	16	20	26
d_{h9}	10	14	20	30	40	50	70	100
F	30	37	48	68	95	120	160	240
f	14	19	26	38	55	70	95	130
G	M8	M12	M16	M24 x 2	M30 x 2	M36 x 3	M52 x 3	M64 x 4
g	10	15	20	30	35	42	50	60
g_1	41,5	49,5	55,5	65,5	75,5	85,5	98	136
K	15,5	15,5	15,5	15,5	-	-	-	-
k	18	30	33	44	59	74	114	163
L_1	Length depends on free stroke							
L_3	in tensile and compressive directions,							
L_4	for calculation please see pages 18/19							
l	38	53	70	95	142,5	180	275	365
n	17	22	31	48	69	90	115	170
t	3	4	5	6	8	8	8	10
SW	9	13	17	27	36	46	65	90

Order Number

__ / 3 1 1 . __ __ 0 / /

Sizes	Release force [4]		Limit switch	L_1	L_3
1 to 8	Low	4	0 Without limit switch [3]	Length of the connecting rod	Length of the sleeve
	Medium	5	1 With integrated limit switch	Calculations according to "Length Dimensioning", see Technical Data, pages 18/19	
	High	6			

Example: Order number 3 / 311.510 / L_1= 230 / L_3= 320

1) Additional sizes for lower or higher release forces on request. Re-engagement force = 20 – 25 % of the release force.

2) $H_{2\ max}$: free stroke in compressive direction (larger free strokes on request)

3) EAS®-axial without limit switch – delivery with bushing (M8 or M5)

4) See Technical Data, release forces F_A

Basic element with guide rod

Type 302._ _0
Sizes 1 to 8

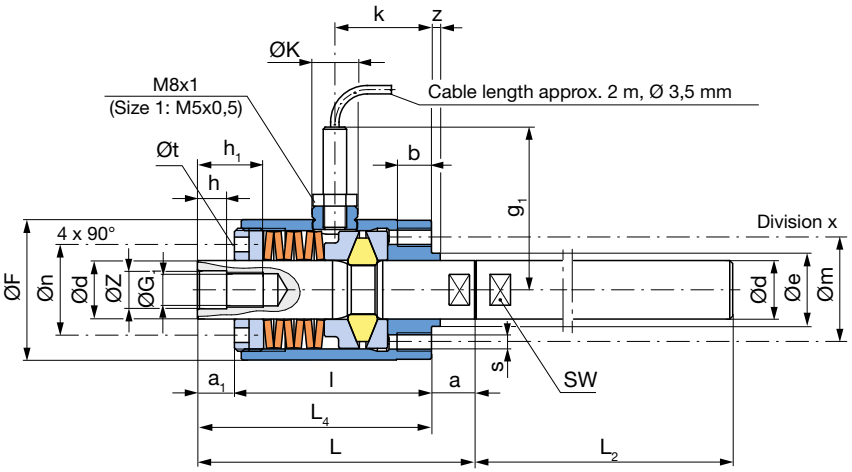

We reserve the right to make dimensional and constructional alterations.

Technical Data				Size							
				1	2	3	4	5	6	7	8
Release forces [1]	Type 302.4_0	F_A	[kN]	0,075 – 0,2	0,2 – 0,5	0,3 – 0,6	0,6 – 2	3 – 7,5	6 – 12	12 – 30	30 – 70
	Type 302.5_0	F_A	[kN]	0,2 – 0,5	0,5 – 0,8	0,6 – 2	2 – 6	6 – 12	12 – 30	30 – 70	70 – 150
	Type 302.6_0	F_A	[kN]	0,3 – 0,8	0,8 – 2	2 – 5	6 – 12	12 – 30	30 – 70	70 – 150	150 – 300
Free stroke [2]	$H_{1\ max}$		[mm]	200	300	400	500	600	700	800	1000

Dimensions [mm]	Size							
	1	2	3	4	5	6	7	8
a	8	12	15	20	32,5	35	50	65
a_1	6	10	10	15	15	15	25	30
b	7	10	12	15	20	22	35	50
d_{h9}	10	14	20	30	40	50	70	100
e_{f7}	14	18	25	35	50	60	85	120
F	30	37	48	68	95	120	160	240
G_1	M6 x 0,75	M10 x 0,75	M12 x 1,0	M20 x 1,0	M24 x 1,5	M30 x 1,5	M48 x 2,0	M75 x 2,0
g_1	41,5	49,5	55,5	65,5	75,5	85,5	98	136
h	5	9	10	15	20	25	35	50
h_1	12	18	22	32	42	53	73	103
K	15,5	15,5	15,5	15,5	-	-	-	-
k	18	30	33	44	59	74	114	163
L	52	75	95	130	190	230	350	460
L_2	Length depends on free stroke in tensile and compressive directions,							
L_4	for calculation please see pages 18/19							
l	38	53	70	95	142,5	180	275	365
m	22	28	37	52	72	90	130	180
n	17	22	31	48	69	90	115	170
s	M3	M5	M6	M8	M10	M12	M16	M24
t	3	4	5	6	8	8	8	10
x	6 x 60°	6 x 60°	6 x 60°	6 x 60°	6 x 60°	6 x 60°	6 x 60°	6 x 60°
Z^{H7}_{h7}	7	11	13	22	28	36	52	78
z	2	2	3	4	6	8	10	15
SW	9	13	17	27	36	46	65	90

Order Number

__ / 3 0 2 . __ __ 0 / __

Sizes	Release force [4]		Limit switch		L_2
1 to 8	Low Medium High	4 5 6	0 1	Without limit switch [3] With integrated limit switch	Length of the guide rod Calculations according to "Length Dimensioning", see Technical Data, pages 18/19

Example: Order number 1 / 302.500 / L_2 = 135

1) Additional sizes for lower or higher release forces on request. Re-engagement force = 20 – 25 % of the release force.

2) $H_{1\ max}$: free stroke in tensile direction (larger free strokes on request)

3) EAS®-axial without limit switch – delivery with bushing (M8 or M5)

4) See Technical Data, release forces F_A

Mounting flange design with guide rod

Type 322._ _0
Sizes 1 to 8

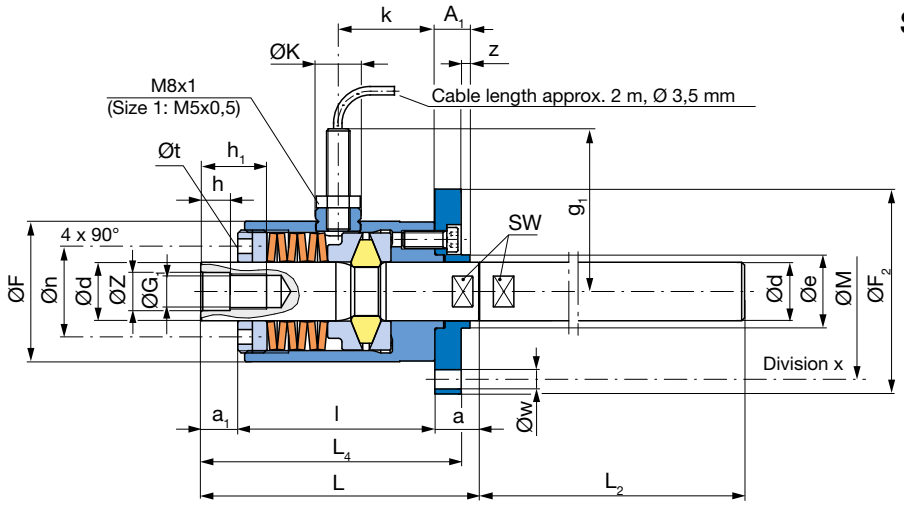

We reserve the right to make dimensional and constructional alterations.

Technical Data				Size 1	2	3	4	5	6	7	8
Release forces [1]	Type 322.4_0	F_A	[kN]	0,075 – 0,2	0,2 – 0,5	0,3 – 0,6	0,6 – 2	3 – 7,5	6 – 12	12 – 30	30 – 70
	Type 322.5_0	F_A	[kN]	0,2 – 0,5	0,5 – 0,8	0,6 – 2	2 – 6	6 – 12	12 – 30	30 – 70	70 – 150
	Type 322.6_0	F_A	[kN]	0,3 – 0,8	0,8 – 2	2 – 5	6 – 12	12 – 30	30 – 70	70 – 150	150 – 300
Free stroke [2]	$H_{1\ max}$		[mm]	200	300	400	500	600	700	800	1000

Dimensions [mm]	Size 1	2	3	4	5	6	7	8
A_1	8	10	12	15	21	30	40	55
a	8	12	15	20	32,5	35	50	65
a_1	6	10	10	15	15	15	25	30
d_{h9}	10	14	20	30	40	50	70	100
e_{f7}	14	18	25	35	50	60	85	120
F	30	37	48	68	95	120	160	240
F_2	42	55	70	95	128	158	210	316
G_1	M6 x 0,75	M10 x 0,75	M12 x 1,0	M20 x 1,0	M24 x 1,5	M30 x 1,5	M48 x 2,0	M75 x 2,0
g_1	41,5	49,5	55,5	65,5	75,5	85,5	98	136
h	5	9	10	15	20	25	35	50
h_1	12	18	22	32	42	53	73	103
K	15,5	15,5	15,5	15,5	-	-	-	-
k	18	30	33	44	59	74	114	163
L	52	75	95	130	190	230	350	460
L_2	Length depends on free stroke in tensile and compressive directions,							
L_4	for calculation please see pages 18/19							
l	38	53	70	95	142,5	180	275	365
M	36	46	60	82	112	140	186	280
n	17	22	31	48	69	90	115	170
t	3	4	5	6	8	8	8	10
w	3,4	5,5	6,6	9	11	13,5	17,5	26
x	6 x 60°	6 x 60°	6 x 60°	6 x 60°	6 x 60°	6 x 60°	6 x 60°	6 x 60°
Z^{H7}_{h7}	7	11	13	22	28	36	52	78
z	2	2	3	4	6	8	10	15
SW	9	13	17	27	36	46	65	90

Order Number

__ / 3 2 2 . __ __ 0 / __

Sizes	Release force [4]		Limit switch		L_2
1 to 8	Low Medium High	4 5 6	0 1	Without limit switch [3] With integrated limit switch	Length of the guide rod Calculations according to "Length Dimensioning", see Technical Data, pages 18/19

Example: Order number 2 / 322.410 / L_2 = 185

1) Additional sizes for lower or higher release forces on request. Re-engagement force = 20 – 25 % of the release force.
2) $H_{1\ max}$: free stroke in tensile direction (larger free strokes on request)
3) EAS®-axial without limit switch – delivery with bushing (M8 or M5)
4) See Technical Data, release forces F_A

Basic element with guide rod and sleeve

Type 312._ _0
Sizes 1 to 8

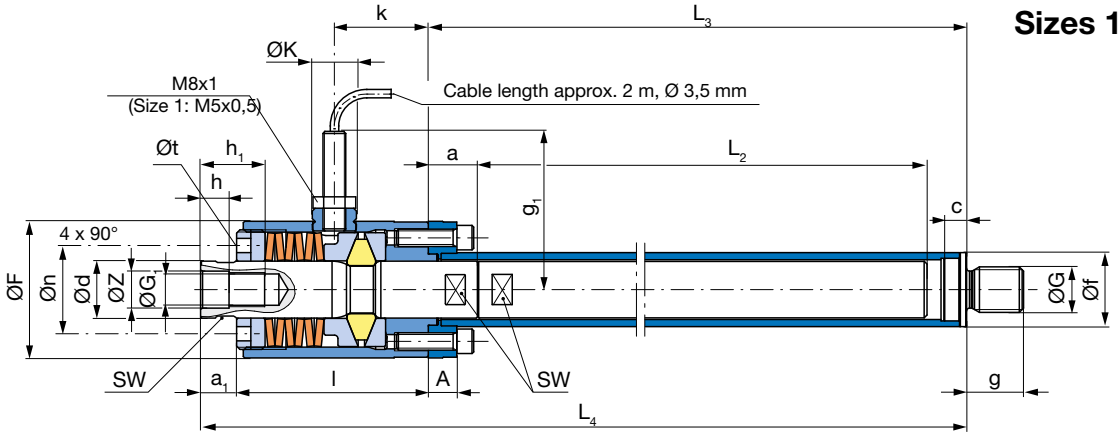

We reserve the right to make dimensional and constructional alterations.

Technical Data				Size							
				1	2	3	4	5	6	7	8
Release forces [1]	Type 312.4_0	F_A	[kN]	0,075 – 0,2	0,2 – 0,5	0,3 – 0,6	0,6 – 2	3 – 7,5	6 – 12	12 – 30	30 – 70
	Type 312.5_0	F_A	[kN]	0,2 – 0,5	0,5 – 0,8	0,6 – 2	2 – 6	6 – 12	12 – 30	30 – 70	70 – 150
	Type 312.6_0	F_A	[kN]	0,3 – 0,8	0,8 – 2	2 – 5	6 – 12	12 – 30	30 – 70	70 – 150	150 – 300
Free stroke [2]	$H_{1\ max}$		[mm]	200	300	400	500	600	700	800	1000

Dimensions [mm]	Size							
	1	2	3	4	5	6	7	8
A	7	8	10	12	15	22	32	44
a	8	12	15	20	32,5	35	50	65
a_1	6	10	10	15	15	15	25	30
c	5	6	8	10	12,5	16	20	26
d_{h9}	10	14	20	30	40	50	70	100
F	30	37	48	68	95	120	160	240
f	14	19	26	38	55	70	95	130
G	M8	M12	M16	M24 x 2	M30 x 2	M36 x 3	M52 x 3	M64 x 4
G_1	M6 x 0,75	M10 x 0,75	M12 x 1,0	M20 x 1,0	M24 x 1,5	M30 x 1,5	M48 x 2,0	M75 x 2,0
g	10	15	20	30	35	42	50	60
g_1	41,5	49,5	55,5	65,5	75,5	85,5	98	136
h	5	9	10	15	20	25	35	50
h_1	12	18	22	32	42	53	73	103
K	15,5	15,5	15,5	15,5	-	-	-	-
k	18	30	33	44	59	74	114	163
L_2	Length depends on free stroke							
L_3	in tensile and compressive directions,							
L_4	for calculation please see pages 18/19							
l	38	53	70	95	142,5	180	275	365
n	17	22	31	48	69	90	115	170
t	3	4	5	6	8	8	8	10
Z^{H7}_{h7}	7	11	13	22	28	36	52	78
SW	9	13	17	27	36	46	65	90

Order Number

__ / 3 1 2 . __ __ 0 / /

Sizes	Release force [4]		Limit switch		L_2	L_3
1 to 8	Low	4	0	Without limit switch [3]	Length of the guide rod	Length of the sleeve
	Medium	5	1	With integrated limit switch	Calculations according to "Length Dimensioning", see Technical Data, pages 18/19	
	High	6				

Example: Order number 1 / 312.600 / L_2= 210 / L_3= 300

1) Additional sizes for lower or higher release forces on request. Re-engagement force = 20 – 25 % of the release force.

2) $H_{1\ max}$: free stroke in tensile direction (larger free strokes on request)

3) EAS®-axial without limit switch – delivery with bushing (M8 or M5)

4) See Technical Data, release forces F_A

Basic element with connecting rod and guide rod

Type 303._ _0
Sizes 1 to 8

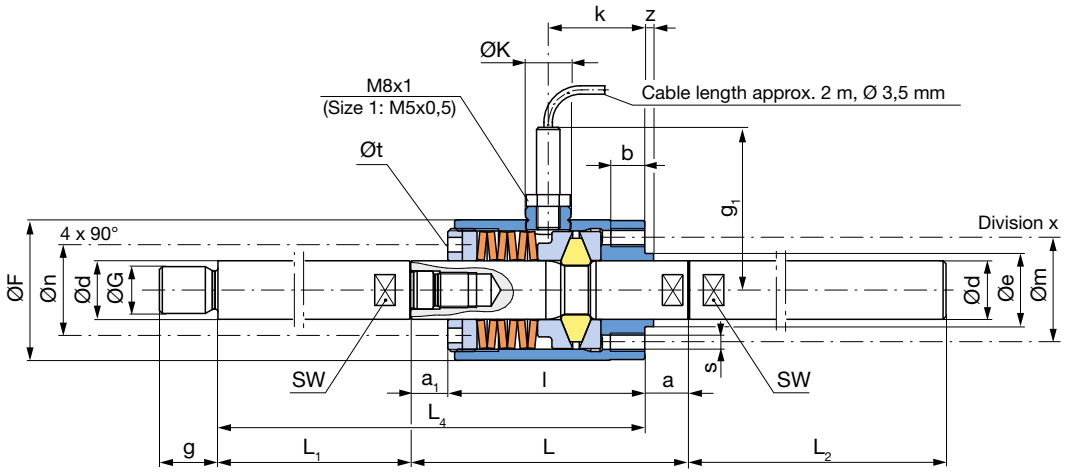

We reserve the right to make dimensional and constructional alterations.

Technical Data				Size							
				1	2	3	4	5	6	7	8
Release forces [1]	Type 303.4_0	F_A	[kN]	0,075 – 0,2	0,2 – 0,5	0,3 – 0,6	0,6 – 2	3 – 7,5	6 – 12	12 – 30	30 – 70
	Type 303.5_0	F_A	[kN]	0,2 – 0,5	0,5 – 0,8	0,6 – 2	2 – 6	6 – 12	12 – 30	30 – 70	70 – 150
	Type 303.6_0	F_A	[kN]	0,3 – 0,8	0,8 – 2	2 – 5	6 – 12	12 – 30	30 – 70	70 – 150	150 – 300
Free stroke [2]	$H_{1\,max}$, $H_{2\,max}$		[mm]	200	300	400	500	600	700	800	1000

Dimensions [mm]	Size							
	1	2	3	4	5	6	7	8
a	8	12	15	20	32,5	35	50	65
a_1	6	10	10	15	15	15	25	30
b	7	10	12	15	20	22	35	50
d_{h9}	10	14	20	30	40	50	70	100
e_{f7}	14	18	25	35	50	60	85	120
F	30	37	48	68	95	120	160	240
G	M8	M12	M16	M24 x 2	M30 x 2	M36 x 3	M52 x 3	M64 x 4
g	10	15	20	30	35	42	50	60
g_1	41,5	49,5	55,5	65,5	75,5	85,5	98	136
K	15,5	15,5	15,5	15,5	-	-	-	-
k	18	30	33	44	59	74	114	163
L	52	75	95	130	190	230	350	460
L_1	Length depends on free stroke							
L_2	in tensile and compressive directions,							
L_4	for calculation please see pages 18/19							
l	38	53	70	95	142,5	180	275	365
m	22	28	37	52	72	90	130	180
n	17	22	31	48	69	90	115	170
s	M3	M5	M6	M8	M10	M12	M16	M24
t	3	4	5	6	8	8	8	10
x	6 x 60°	6 x 60°	6 x 60°	6 x 60°	6 x 60°	6 x 60°	6 x 60°	6 x 60°
z	2	2	3	4	6	8	10	15
SW	9	13	17	27	36	46	65	90

Order Number

__ / 3 0 3 . __ __ 0 / /

Sizes	Release force [4]		Limit switch		L_1	L_2
1 to 8	Low	4	0	Without limit switch [3]	Length of the connecting rod	Length of the guide rod
	Medium	5	1	With integrated limit switch	Calculations according to "Length Dimensioning", see Technical Data, pages 18/19	
	High	6				

Example: Order number 2 / 303.610 / L_1= 320 / L_2= 320

1) Additional sizes for lower or higher release forces on request. Re-engagement force = 20 – 25 % of the release force.

2) $H_{1\,max}$: free stroke in tensile direction; $H_{2\,max}$: free stroke in compressive direction (larger free strokes on request)

3) EAS®-axial without limit switch – delivery with bushing (M8 or M5)

4) See Technical Data, release forces F_A

Mounting flange design with connecting rod and guide rod

Type 323._ _0
Sizes 1 to 8

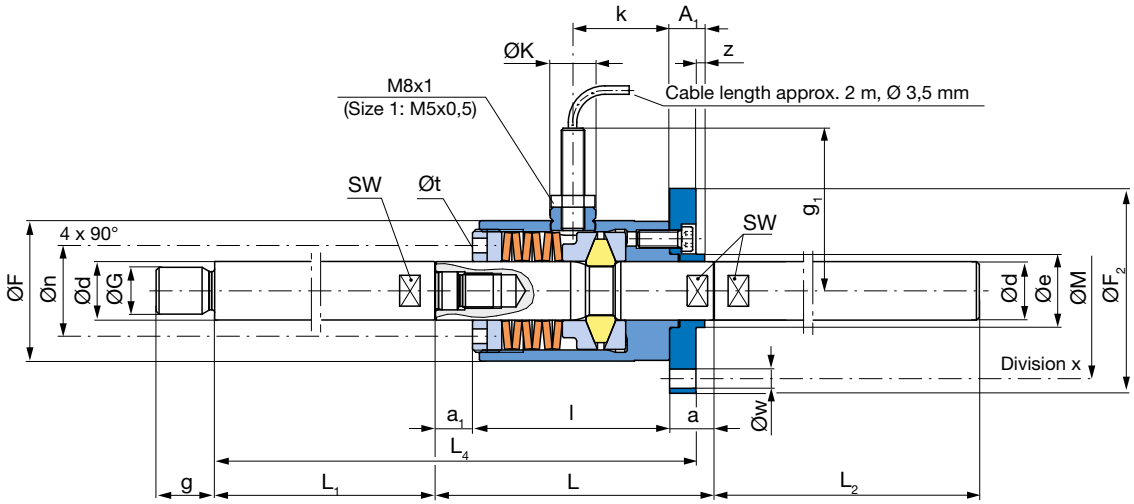

We reserve the right to make dimensional and constructional alterations.

Technical Data				Size							
				1	2	3	4	5	6	7	8
Release forces [1]	Type 323.4_0	F_A	[kN]	0,075 – 0,2	0,2 – 0,5	0,3 – 0,6	0,6 – 2	3 – 7,5	6 – 12	12 – 30	30 – 70
	Type 323.5_0	F_A	[kN]	0,2 – 0,5	0,5 – 0,8	0,6 – 2	2 – 6	6 – 12	12 – 30	30 – 70	70 – 150
	Type 323.6_0	F_A	[kN]	0,3 – 0,8	0,8 – 2	2 – 5	6 – 12	12 – 30	30 – 70	70 – 150	150 – 300
Free stroke [2]	$H_{1\ max}$, $H_{2\ max}$		[mm]	200	300	400	500	600	700	800	1000

Dimensions [mm]	Size							
	1	2	3	4	5	6	7	8
A_1	8	10	12	15	21	30	40	55
a	8	12	15	20	32,5	35	50	65
a_1	6	10	10	15	15	15	25	30
d_{h9}	10	14	20	30	40	50	70	100
e_{f7}	14	18	25	35	50	60	85	120
F	30	37	48	68	95	120	160	240
F_2	42	55	70	95	128	158	210	316
G	M8	M12	M16	M24 x 2	M30 x 2	M36 x 3	M52 x 3	M64 x 4
g	10	15	20	30	35	42	50	60
g_1	41,5	49,5	55,5	65,5	75,5	85,5	98	136
K	15,5	15,5	15,5	15,5	-	-	-	-
k	18	30	33	44	59	74	114	163
L	52	75	95	130	190	230	350	460
L_1	Length depends on free stroke							
L_2	in tensile and compressive directions,							
L_4	for calculation please see pages 18/19							
l	38	53	70	95	142,5	180	275	365
M	36	46	60	82	112	140	186	280
n	17	22	31	48	69	90	115	170
t	3	4	5	6	8	8	8	10
w	3,4	5,5	6,6	9	11	13,5	17,5	26
x	6 x 60°	6 x 60°	6 x 60°	6 x 60°	6 x 60°	6 x 60°	6 x 60°	6 x 60°
z	2	2	3	4	6	8	10	15
SW	9	13	17	27	36	46	65	90

Order Number

__ / 3 2 3 . __ __ 0 / /

Sizes	Release force [4]		Limit switch		L_1	L_2
1 to 8	Low	4	0	Without limit switch [3]	Length of the connecting rod	Length of the guide rod
	Medium	5	1	With integrated limit switch	Calculations according to "Length Dimensioning", see Technical Data, pages 18/19	
	High	6				

Example: Order number 2 / 323.400 / L_1= 140 / L_2= 155

1) Additional sizes for lower or higher release forces on request. Re-engagement force = 20 – 25 % of the release force.

2) $H_{1\ max}$: free stroke in tensile direction; $H_{2\ max}$: free stroke in compressive direction (larger free strokes on request)

3) EAS®-axial without limit switch – delivery with bushing (M8 or M5)

4) See Technical Data, release forces F_A

Basic element with connecting rod, guide rod and sleeve

Type 313._ _0
Sizes 1 to 8

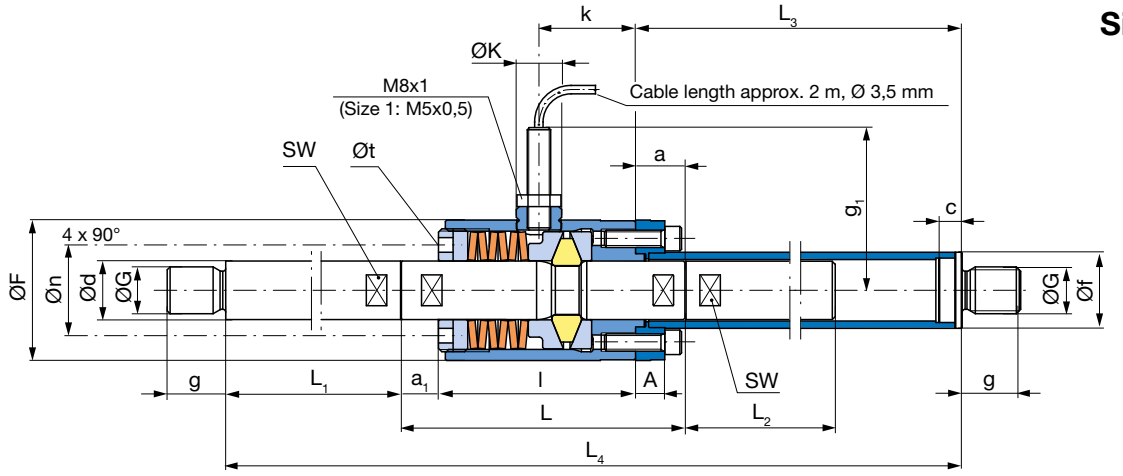

We reserve the right to make dimensional and constructional alterations.

Technical Data				Size							
				1	2	3	4	5	6	7	8
Release forces [1]	Type 313.4_0	F_A	[kN]	0,075 – 0,2	0,2 – 0,5	0,3 – 0,6	0,6 – 2	3 – 7,5	6 – 12	12 – 30	30 – 70
	Type 313.5_0	F_A	[kN]	0,2 – 0,5	0,5 – 0,8	0,6 – 2	2 – 6	6 – 12	12 – 30	30 – 70	70 – 150
	Type 313.6_0	F_A	[kN]	0,3 – 0,8	0,8 – 2	2 – 5	6 – 12	12 – 30	30 – 70	70 – 150	150 – 300
Free stroke [2]	$H_{1\,max}$, $H_{2\,max}$		[mm]	200	300	400	500	600	700	800	1000

Dimensions [mm]	Size							
	1	2	3	4	5	6	7	8
A	7	8	10	12	15	22	32	44
a	8	12	15	20	32,5	35	50	65
a_1	6	10	10	15	15	15	25	30
c	5	6	8	10	12,5	16	20	26
d_{h9}	10	14	20	30	40	50	70	100
F	30	37	48	68	95	120	160	240
f	14	19	26	38	55	70	95	130
G	M8	M12	M16	M24 x 2	M30 x 2	M36 x 3	M52 x 3	M64 x 4
g	10	15	20	30	35	42	50	60
g_1	41,5	49,5	55,5	65,5	75,5	85,5	98	136
K	15,5	15,5	15,5	15,5	-	-	-	-
k	18	30	33	44	59	74	114	163
L	52	75	95	130	190	230	350	460
L_1	Length depends on free stroke							
L_2	in tensile and							
L_3	compressive directions,							
L_4	for calculation please see pages 18/19							
l	38	53	70	95	142,5	180	275	365
n	17	22	31	48	69	90	115	170
t	3	4	5	6	8	8	8	10
SW	9	13	17	27	36	46	65	90

Order Number

__ / 3 1 3 . __ __ 0 / / /

Sizes	Release force [4]		Limit switch		L_1	L_2	L_3
1 to 8	Low	4	0	Without limit switch [3]	Length of the connecting rod	Length of the guide rod	Length of the sleeve
	Medium	5	1	With integrated limit switch			
	High	6					

Calculations according to "Length Dimensioning", see Technical Data, pages 18/19

Example: Order number 2 / 313.400 / L_1= 140 / L_2= 136 / L_3= 310

1) Additional sizes for lower or higher release forces on request. Re-engagement force = 20 – 25 % of the release force.

2) $H_{1\,max}$: free stroke in tensile direction; $H_{2\,max}$: free stroke in compressive direction (larger free strokes on request)

3) EAS®-axial without limit switch – delivery with bushing (M8 or M5)

4) See Technical Data, release forces F_A

Technical Explanations – Length Dimensioning

with given free stroke: in tensile direction H_1 / in compressive direction H_2

Disengagement direction free stroke		Design			Type	Minimum length of			Minimum installation length	Page
Tensile H_1	Com-pressive H_2	Connecting rod	Element	Guide rod / sleeve		connecting rod L_1 [mm]	guide rod L_2 [mm]	sleeve L_3 [mm]	L_4 [mm]	
		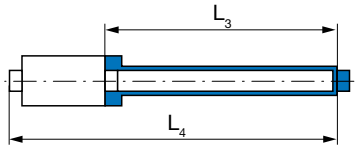			310._ _0			$L_3 = H_2 + a + c + 2$	$L_4 = L_3 + a_1 + l$	8
	→	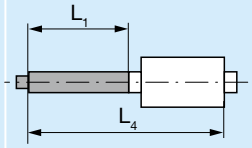			301._ _0	$L_1 = H_2 - a_1$			$L_4 = L_1 + a_1 + l$	9
	→	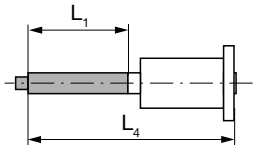			321._ _0	$L_1 = H_2 - a_1$			$L_4 = L_1 + a_1 + l + A_1 - z$	10
	→	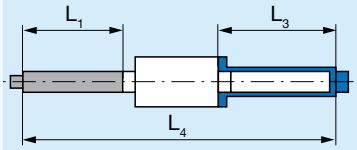			311._ _0	$L_1 = H_2 - a_1$		$L_3 = H_2 + a + c + 2$	$L_4 = L_1 + L_3 + a_1 + l$	11
←		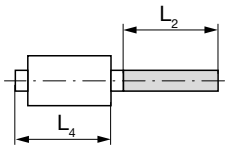			302._ _0		$L_2 = H_1 - a - 2$		$L_4 = a_1 + l$	12
←		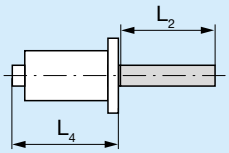			322._ _0		$L_2 = H_1 - a - 2$		$L_4 = a_1 + l + A_1 - z$	13
←		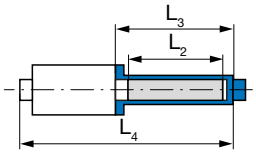			312._ _0		$L_2 = H_1 - a - 2$	$L_3 = H_1 + c$	$L_4 = L_3 + a_1 + l$	14
← →		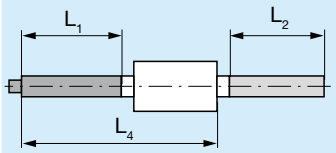			303._ _0	$L_1 = H_2 - a_1$	$L_2 = H_1 - a - 2$		$L_4 = L_1 + a_1 + l$	15
← →		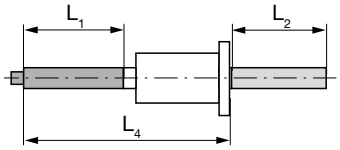			323._ _0	$L_1 = H_2 - a_1$	$L_2 = H_1 - a - 2$		$L_4 = L_1 + a_1 + l + A_1 - z$	16
← →		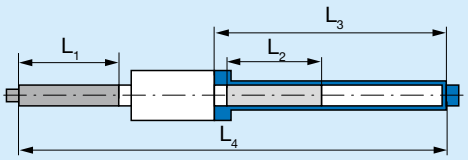			313._ _0	$L_1 = H_2 - a_1$	$L_2 = H_1 - a - 2$	$L_3 = H_1 + H_2 + c$	$L_4 = L_1 + L_3 + a_1 + l$	17

Classifications

H_1	[mm]	Free stroke in tensile direction The max. defined free stroke in tensile direction must not be exceeded, otherwise the element will be pulled apart.
H_2	[mm]	Free stroke in compressive direction
L_1	[mm]	Minimum length of the connecting rod in order to carry out the free stroke in compressive direction H_2.
L_2	[mm]	Minimum length of the guide rod in order to carry out the free stroke in tensile direction H_1.
L_3	[mm]	Minimum sleeve length
L_4	[mm]	Minimum installation length If a larger installation length is required, the sleeve or the connecting rod must be chosen in an appropriate longer length
A_1	[mm]	see Technical Data
a	[mm]	see Technical Data
a_1	[mm]	see Technical Data
c	[mm]	see Technical Data
l	[mm]	see Technical Data
z	[mm]	see Technical Data

Calculation example for length dimensioning

Crank drive for linear movement of a carriage.

Technical Data:

Mass: $m = 40$ kg

Drive speed: $n = 150$ rpm

Angular speed: $\omega = \frac{n \cdot \pi}{30} = 15{,}71\ s^{-1}$

Connecting rod ratio: $\lambda = \frac{r}{D} = 0{,}05$

Transmission: $i = \frac{C}{B} = 3$

Dimensions:

B = 150 mm E = 94 mm

C = 450 mm L_E = 762 mm

D = 950 mm r = 50 mm

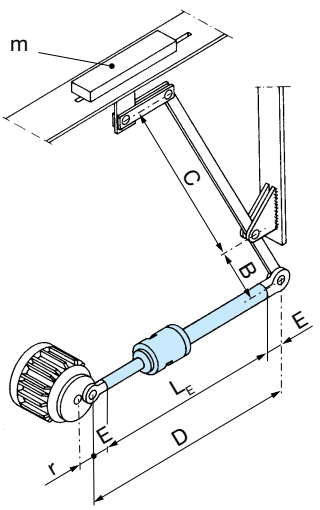

Fig.1

1. Forces on the carriage and on the EAS®-axial

1.1 Maximum acceleration of the crank drive

$a_{max} = \omega^2 \cdot r\,(1 + \lambda) = 12{,}96\ m/s^2$

1.2 Acceleration on carriage

$a_{Sch} = a_K \cdot i = 12{,}96\ m/s^2 \,.\, 3 = 38{,}88\ m/s^2$

1.3 Force on carriage

$F_{Sch} = m \cdot a_{Sch} = 40\ kg \,.\, 38{,}88\ m/s^2 = 1555\ N$

1.4 Force on the EAS®-axial

$F_{EAS} = F_{Sch} \cdot i = 1555\ N \,.\, 3 = 4665\ N$

2. Type and Size selection for the EAS®-axial

2.1 Level of release force F_A

$F_A = F_{EAS} \cdot 1{,}5 = 4665 \cdot 1{,}5 = 6998\ N$

(Factor 1,5 taking the friction conditions into account)

2.2 Size and Type (design with connecting rod, guide rod and sleeve, page 17)

Size 4, Type 313.600 (release force 6000 – 12000 N)

3. Length dimensioning (see page 18)

3.1 Minimum length of the connecting rod L_1

$L_1 = H_2 - a_1 = 100\ mm - 15\ mm = 85\ mm$

with: $H_2 = 2 \cdot r$; a_1 see Dimensions, page 17

3.2 Minimum length of the guide rod L_2

$L_2 = H_1 - a - 2 = (100 - 20 - 2)\ mm = 78\ mm$

with: $H_1 = 2 \cdot r$; a see Dimensions, page 17

3.3 Minimum sleeve length L_3

$L_3 = H_1 + H_2 + c = (100 + 100 + 10)\ mm = 210\ mm$

with: $H_1 = H_2 = 2 \cdot r$; c see Dimensions, page 17

3.4 Minimum installation length L_4

$L_4 = L_1 + L_3 + a_1 + l = (85 + 210 + 15 + 95)\ mm = 405\ mm$

with: L_1 and L_3 from 3.1 and 3.3;
a_1 and l see Dimensions, page 17

3.5 The difference ΔL from the required installation length L_E to minimum installation length L_4 is balanced by lengthening the connecting rod and the sleeve.

$\Delta L = L_E - L_4 = 762 - 405 = 357\ mm$

Connecting rod length: $L_1 + 178 = 263$ mm

Sleeve length: $L_3 + 179 = 389$ mm

3.6 Maximum permitted length of the connecting rod and the sleeve

Connecting rod: $L_1 = H_2 - a_1 = 500 - 15 = 485$ mm

Sleeve: $L_3 = H_1 + H_2 + c = 500 + 500 + 10 = 1010$ mm

The connecting rod and the sleeve must not be longer than the calculatory length with maximum free stroke H_1 and H_2, see Dimensions (for Size 4: $H_1 = H_2 = 500$ mm).

Technical Explanations

Adjustment of the release force

The force at which the EAS®-axial should disengage (release force) can be adjusted by changing the cup spring pre-tension.

Adjusting Sizes 1 – 4 (Fig. 3)

After having released the set screws (1), the adjusting nut (2) is set to dimension “a” as shown in the Adjustment Diagram (Fig. 2) using a face wrench. By turning the adjusting nut clockwise, the release force is increased. Turning the adjusting nut counter-clockwise leads to a decrease in release force (viewing direction: facing the front of the adjusting nut (2)). Afterwards, the adjusting nut (2) must be secured again using the set screws (1).

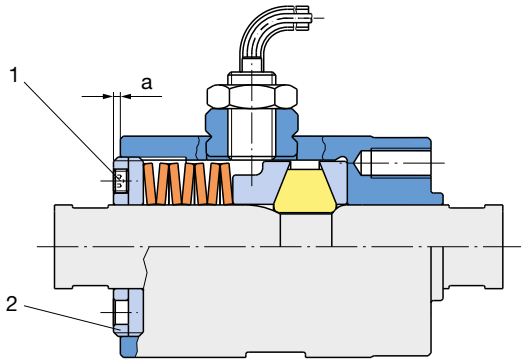

Fig. 3

Adjusting Sizes 5 – 8 (Fig. 4):

There are 4 or 6 set screws (3) in the adjusting nut (2), which can be set to dimension “a”. Countering the set screws (3) with hexagon nuts (4) prevents inadvertent changes to the adjustment. The Adjustment Diagram shows the relationship between Dimension “a” (Fig. 4) and the release force.

On request, we can deliver the EAS®-axial pre-set to the required release force.

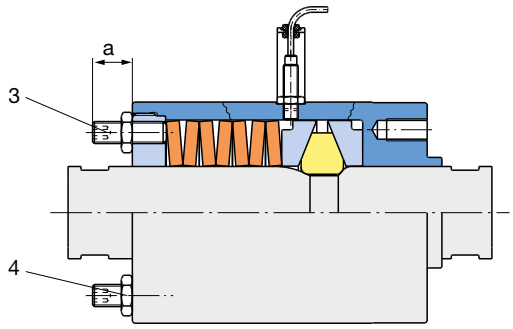

Fig. 4

Example:

- Size and Type:

  Size 4, Type 313.600 (basic element with connecting rod, guide rod and sleeve, page 17)

- Release force F_A:

  F_A = 10 000 N (release force range 6 000 – 12 000 N)

- Dimension “a”:

  a = 2 mm (Fig. 2)

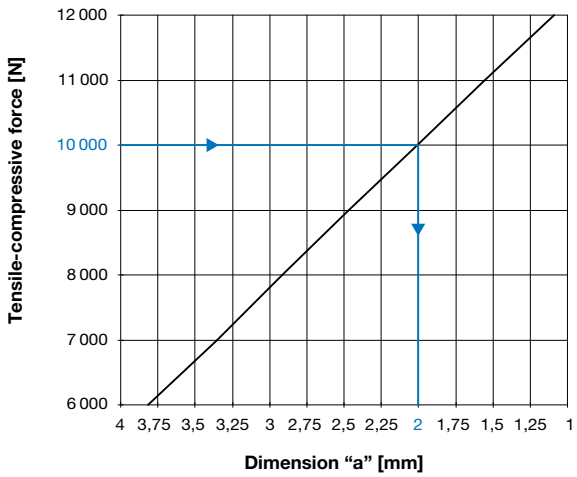

Fig. 2 (This Adjustment Diagram *for Size 4, Type 3_ _.6_0* only serves as an example!)

Technical Explanations

Installation

The EAS®-axial is delivered manufacturer-assembled ready for installation. Special areas for the wrenches have been milled onto the individual components so that the connecting rod, the guide rod and the bolt can be screwed together. The screw connections are secured against automatic loosening using Loctite 243 (medium hard). The connection threads on the connecting rod and the sleeve are designed for mounting spherical joint ends acc. DIN 648, which *mayr*® can deliver on request.
On the designs with integrated limit switch, the proximity switch cable must be secured so that it cannot be damaged by movement of the EAS®-axial during operation or on disengagement.

Adjustment of the limit switch (PNP NC contact)

The EAS®-axial with integrated limit switch emits a signal on disengagement (overload), which can be used to switch off the drive. The limit switch is mounted and set at the site of manufacture.

Installation procedure and adjustment:

- Screw the proximity switch into the housing until it is damped.
- Slowly turn it back again until the switching condition changes again (undamped).
- Turn back by a further 45° (for Size 1, 90°) and mark this adjustment point.
- Carefully counter the proximity switch using a hexagon nut M8 x 1 (Size 1: M5 x 0,5) (tightening torque M5 = 1 Nm; M8 = 6 Nm). When countering, take out the thread backlash. The proximity switch thread must not be damaged.

After adjustment, the proximity switch cable must be secured to the EAS®-axial so that no damage can occur during operation (please attach a strain relief).

Wiring example

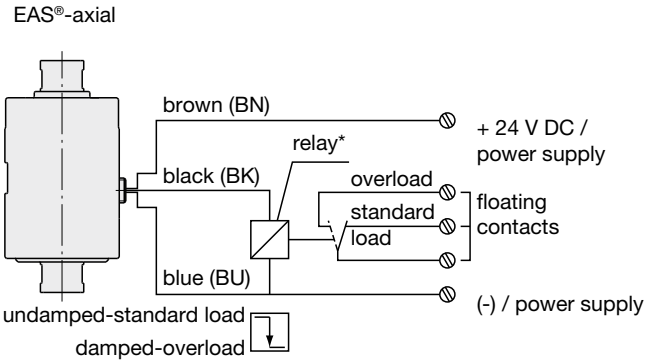

* Relay (+24 V DC / 200 mA) is not part of the scope of delivery

Fig. 5

Maintenance

The EAS®-axial is completely enclosed, provided with a first grease filling and therefore requires no particular maintenance work. Special maintenance work may only be necessary should the device be subject to very dirty, dusty or extreme ambient conditions.
The EAS®-axial maintenance work basically only means re-lubrication of the contact geometries. For greasing, please use NLGI Class 2 grease with a basic oil viscosity of 220 mm^2/s at 40 °C, e.g. Mobilgrease HP222.
Please check the disengagement mechanism of the EAS®-axial annually.
We recommend that maintenance work is carried out at the site of manufacture.

Why is it worth using EAS®-safety clutches?

Advantages for the Machine Manufacturer

Safety clutches ensure that the load on the components does not exceed the permitted values due to exact torque limitation.

This means that the modern demands on the machine construction can be fulfilled without risk.

- ❑ **Reduction of constructional safety factors**
- ❑ **Optimum machine dimensions**
- ❑ **Low mass moment of inertia**
- ❑ **Smaller drive motors and gearbox**
- ❑ **Material and price reductions**
- ❑ **High rigidity and vibration-free transmission**

Advantages for Productional Operation

No machine is safe from collisions. They occur due to incorrect operation, control software and hardware malfunctions or ambient influences such as foreign objects.

Safety clutches provide reliable protection and ensure:

- ❑ **Low operational costs**
- ❑ **Minimum repair time expenditure**
- ❑ **High system availability**
- ❑ **High productivity**
- ❑ **Punctual production**
- ❑ **Good delivery image for customers**

Classification of *mayr*®-safety clutches

	Torque limiting	Force limiting	Frictionally-locking	Positive-locking	Magnetic	Ratchetting	Disengaging	Pneum. switchable + controllable	Electr. switchable + controllable	Rustproof	Rustproof and sealed	Catalogue
Load holding safety clutches												
ROBA®-slip hubs	x		x									K.123.V_ _._ _
EAS®-torque sensor	x			x								K.407.V_ _._ _
ROBA®-contitorque	x				x					x	x	K.150.V_ _._ _
ROBA®-capping head	x				x					x	x	P.151000.V_ _._ _
Load separating safety clutches												
EAS®-Compact® / EAS®-NC	x			x		x				x	x	K.490.V_ _._ _
EAS®-smartic®	x			x		x						K.481.V_ _._ _
EAS®-400	x			x		x						K.407.V_ _._ _
EAS®-Compact®-overload clutch	x			x			x					K.490.V_ _._ _
EAS®-HSC	x			x			x					P.4090.V_ _._ _
EAS®-element clutch	x			x			x					K.440.V_ _._ _
EAS®-elements	x			x			x					K.440.V_ _._ _
EAS®-HSE	x			x			x					P.4090.V_ _._ _
EAS®-dutytorque	x			x			x					K.4043.V_ _._ _
EAS®-Sp	x			x			x	x				K.406.V_ _._ _
EAS®-Sm / EAS®-Zr	x			x			x		x			K.406.V_ _._ _
EAS®-axial		x		x			x					K.403.C.V_ _._ _

Product Summary

Safety Clutches/Overload Clutches

- **EAS®-Compact®/EAS®-NC**
  Positive locking and completely backlash-free torque limiting clutches
- **EAS®-smartic®**
  Cost-effective torque limiting clutches, quick installation
- **EAS®-element clutch/EAS®-elements**
  Load-disconnecting protection against high torques
- **EAS®-axial**
  Exact limitation of tensile and compressive forces
- **EAS®-Sp/EAS®-Sm/EAS®-Zr**
  Load-disconnecting torque limiting clutches with switching function
- **ROBA®-slip hub**
  Load-holding, frictionally locked torque limiting clutches
- **ROBA®-contitorque**
  Magnetic continuous slip clutches

Shaft Couplings

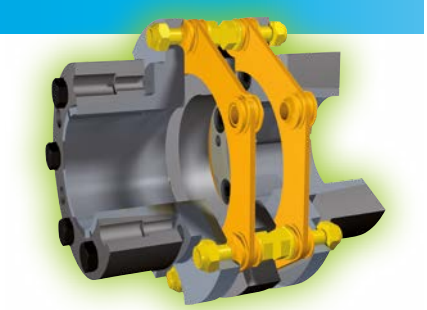

- **smartflex®/primeflex®**
  Perfect precision couplings for servo and stepping motors
- **ROBA®-ES**
  Backlash-free and damping for vibration-sensitive drives
- **ROBA®-DS/ROBA®-D**
  Backlash-free, torsionally rigid all-steel couplings
- **ROBA®-DSM**
  Cost-effective torque-measuring couplings

Electromagnetic Brakes/Clutches

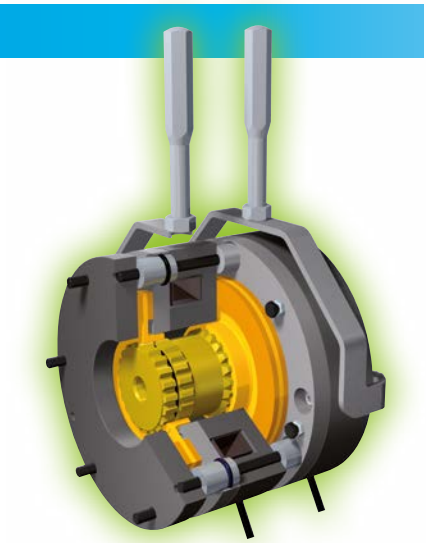

- **ROBA-stop® standard**
  Multifunctional all-round safety brakes
- **ROBA-stop®-M motor brakes**
  Robust, cost-effective motor brakes
- **ROBA-stop®-S**
  Water-proof, robust monoblock brakes
- **ROBA-stop®-Z/ROBA-stop®-silenzio®**
  Doubly safe elevator brakes
- **ROBA®-diskstop®**
  Compact, very quiet disk brakes
- **ROBA®-topstop®**
  Brake systems for gravity loaded axes
- **ROBA®-linearstop**
  Backlash-free brake systems for linear motor axes
- **ROBA®-guidestop**
  Backlash-free holding brake for profield rail guides
- **ROBATIC®/ROBA®-quick/ROBA®-takt**
  Electromagnetic clutches and brakes, clutch brake units

DC Drives

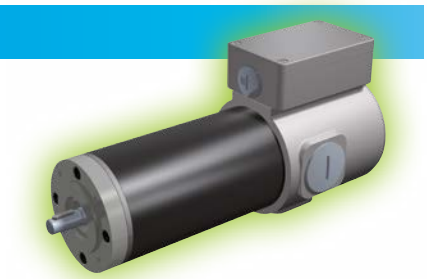

- **tendo®-PM**
  Permanent magnet-excited DC motors
- **tendo®-SC**
  1 quadrant and 4 quadrant transistor controllers

Headquarters

Chr. Mayr GmbH + Co. KG
Eichenstraße 1, D-87665 Mauerstetten
Tel.: +49 83 41/8 04-0, Fax: +49 83 41/80 44 21
www.mayr.com, E-Mail: info@mayr.com

mayr®
your reliable partner

Service Germany

Baden-Württemberg
Esslinger Straße 7
70771 Leinfelden-Echterdingen
Tel.: 07 11/45 96 01 0
Fax: 07 11/45 96 01 10

Bavaria
Eichenstraße 1
87665 Mauerstetten
Tel.: 0 83 41/80 41 04
Fax: 0 83 41/80 44 23

Chemnitz
Bornaer Straße 205
09114 Chemnitz
Tel.: 03 71/4 74 18 96
Fax: 03 71/4 74 18 95

Franken
Unterer Markt 9
91217 Hersbruck
Tel.: 0 91 51/81 48 64
Fax: 0 91 51/81 62 45

Hagen
Im Langenstück 6
58093 Hagen
Tel.: 0 23 31/78 03 0
Fax: 0 23 31/78 03 25

Kamen
Lünener Straße 211
59174 Kamen
Tel.: 0 23 07/23 63 85
Fax: 0 23 07/24 26 74

North
Schiefer Brink 8
32699 Extertal
Tel.: 0 57 54/9 20 77
Fax: 0 57 54/9 20 78

Rhine-Main
Hans-Böckler-Straße 6
64823 Groß-Umstadt
Tel.: 0 60 78/7 82 53 37
Fax: 0 60 78/9 30 08 00

Branch office

China
Mayr Zhangjiagang
Power Transmission Co., Ltd.
Changxing Road No. 16,
215600 Zhangjiagang
Tel.: 05 12/58 91-75 65
Fax: 05 12/58 91-75 66
info@mayr-ptc.cn

Great Britain
Mayr Transmissions Ltd.
Valley Road, Business Park
Keighley, BD21 4LZ
West Yorkshire
Tel.: 0 15 35/66 39 00
Fax: 0 15 35/66 32 61
sales@mayr.co.uk

France
Mayr France S.A.S.
Z.A.L. du Minopole
Rue Nungesser et Coli
62160 Bully-Les-Mines
Tel.: 03.21.72.91.91
Fax: 03.21.29.71.77
contact@mayr.fr

Italy
Mayr Italia S.r.l.
Viale Veneto, 3
35020 Saonara (PD)
Tel.: 0498/79 10 20
Fax: 0498/79 10 22
info@mayr-italia.it

Singapore
Mayr Transmission (S) PTE Ltd.
No. 8 Boon Lay Way Unit 03-06,
TradeHub 21
Singapore 609964
Tel.: 00 65/65 60 12 30
Fax: 00 65/65 60 10 00
info@mayr.com.sg

Switzerland
Mayr Kupplungen AG
Tobeläckerstraße 11
8212 Neuhausen am Rheinfall
Tel.: 0 52/6 74 08 70
Fax: 0 52/6 74 08 75
info@mayr.ch

USA
Mayr Corporation
4 North Street
Waldwick
NJ 07463
Tel.: 2 01/4 45-72 10
Fax: 2 01/4 45-80 19
info@mayrcorp.com

Representatives

Australia
Regal Beloit Australia Pty Ltd.
19 Corporate Ave
03178 Rowville, Victoria
Australien
Tel.: 0 3/92 37 40 00
Fax: 0 3/92 37 40 80
salesAUvic@regalbeloit.com

India
National Engineering
Company (NENCO)
J-225, M.I.D.C.
Bhosari Pune 411026
Tel.: 0 20/27 13 00 29
Fax: 0 20/27 13 02 29
nenco@nenco.org

Japan
MATSUI Corporation
2-4-7 Azabudai
Minato-ku
Tokyo 106-8641
Tel.: 03/35 86-41 41
Fax: 03/32 24 24 10
k.goto@matsui-corp.co.jp

Netherlands
Groneman BV
Amarilstraat 11
7554 TV Hengelo OV
Tel.: 074/2 55 11 40
Fax: 074/2 55 11 09
aandrijftechniek@groneman.nl

Poland
Wamex Sp. z o.o.
ul. Pozaryskiego, 28
04-703 Warszawa
Tel.: 0 22/6 15 90 80
Fax: 0 22/8 15 61 80
wamex@wamex.com.pl

South Korea
Mayr Korea Co. Ltd.
Room No.1002, 10th floor,
Nex Zone, SK TECHNOPARK,
77-1, SungSan-Dong,
SungSan-Gu, Changwon, Korea
Tel.: 0 55/2 62-40 24
Fax: 0 55/2 62-40 25
info@mayrkorea.com

Taiwan
German Tech Auto Co., Ltd.
No. 28, Fenggong Zhong Road,
Shengang Dist.,
Taichung City 429, Taiwan R.O.C.
Tel.: 04/25 15 05 66
Fax: 04/25 15 24 13
abby@zfgta.com.tw

Czech Republic
BMC - TECH s.r.o.
Hviezdoslavova 29 b
62700 Brno
Tel.: 05/45 22 60 47
Fax: 05/45 22 60 48
info@bmc-tech.cz

More representatives:

Austria, Belgium, Brazil, Canada, Denmark, Finland, Greece, Hongkong, Hungary, Indonesia, Israel, Luxembourg, Malaysia, New Zealand, Norway, Philippines, Romania, Russia, Slovakia, Slovenia, South Africa, Spain, Sweden, Thailand, Turkey

You can find the complete address for the representative responsible for your area under www.mayr.com in the internet.

19/12/2014 SC