Profiling Other Quality Couplings
from System Components

SYSTEM COMPONENTS, INC.

POWERTORK® SERIES F

Flange Type Gear Couplings

FullFlex, Flex Rigid, and Rigid Rigid stock available in sizes 1-F through 10-F accommodating bore sizes up to 14 1/8". Also available in sizes up to 16-F accommodating bore sizes up to 22.5.

POWERTORK® SERIES S

Sleeve Type Gear Couplings

All Series S continuous sleeve type couplings incorporate a one-piece splined sleeve and two hugs with triple-crowned gear teeth. These products are much smaller in diameter and lighter than flange couplings.

Flextork® ELASTOMERIC COUPLINGS

SYSTEM COMPONENTS, INC.

1635 Stieve Drive, South Haven,MI 49090 | P: 269-637-2191 F: 269-637-8377
www.sci-couplings.com

Printed in U.S.A

CAT NO. FS D

1635 Stieve Drive, South Haven, MI 49090
P: 269-637-2191 F: 269-637-8377
sci-couplings.com

An Introduction to System Components, Inc. and Couplings with Clear Competitive Advantages

Since 1967, System Components, Inc. has specialized in providing a select range of the highest quality couplings for *non-automotive power* transmission applications. This catalog profiles our standard products and the many refinements and advantages they offer compared to competing products. But may we also point out the many *other* reasons why our customers have elected to deal with our company ... many for longer than 25 years?

One key reason is our willingness and ability to custom-modify our standard products or custom-engineer a special product to meet specific application requirements.

Another is that, as a relatively small, specialty company, we can be more responsive to customer requests for product information, technical assistance, design assistance, and quotations. Since we are not a "*power transmission superstore*", our personnel are more intimately familiar with the application of our products for optimum solutions. Plus, because we deal with a smaller number of customers than the giants, our staff has more time to make sure all your requests are handled more promptly.

Yet another reason is our reputation for competitive pricing. Again, by remaining a specialist, we have been able to develop more efficient manufacturing and assembly systems than those responsible for a much wider range of products. Also, we do not bear the heavy overhead costs of our much bigger competitors. In the product categories where we compete, we are consistently able to meet or beat our competitor's price ... even as we deliver distinct product quality enhancements.

Of course the number one reason our customers remain our customers is because they have compared our products to others and found them superior. In fact, many have reported SCI components have been operating trouble-free for more than a decade. Here is a brief review of the many small refinements engineered into our couplings that result in a big quality and performance advantage for our customers.

With all this in mind, we hope you agree System Components and its products deserve a closer look. Contact us for a list of satisfied customer contacts in any of dozens of power transmission applications. Learn from your colleagues why they prefer to deal with a couplings specialist . . . and how FLEXTORK® couplings have consistently outperformed others to provide considerably better value, even at a typically lower price.

Profiling FLEXTORK® Series EL Elastomeric Couplings

FLEXTORK® elastomeric couplings are a unique answer to drivetrain misalignment, shock loads, and torsional vibration challenges. They offer the highest torque and speed rating for their size of any coupling available.

The unique advantages FLEXTORK® couplings offer include:

- Easily installed and serviced.
- Designed to be a "drop out" element coupling.
- Requires no lubrication.
- Torque ratings up to five times higher than competitive products.
- Extremely low weight to transmitted torque ratio.
- Cushions shock loads and dampens torsional vibration.
- Electrically insulated.
- Wide operating temperature range: -49F to +230F.
- Each coupling size serves a wider range of applications; reduces inventory.
- Exceptional torque reserve; braking torque is 4 to 8 times rated operating torque.
- Documented superior service life; dramatically out performs competitors.

Of course, all this sounds good. Where is the proof? Consider this excerpt from a recent letter we received from Mr. E. Allen Springer, Vice President of Engineering for Engineered Air Systems Inc., manufacturer of diesel engine powered flightline air conditioners:

> *"...for your information, during the course of...development...we tried numerous products, including Kop-Flex's flexible disc; Spicer's double universal driveshaft; and Dodge's floating shaft with two different flexible elements. None of these products worked for periods longer than two hours. Based on our success with your elastomeric coupling...we contacted you about a driveshaft possessing a high torsional stiffness incorporating the same concepts. As it is now history, this shaft worked well, and we are using it every day in our production. I am planning on using the same drivetrain concept...for our next generation product. Thanks for your assistance."*

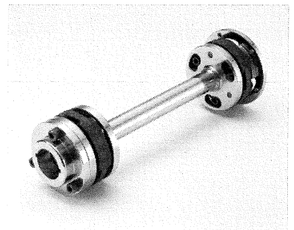

Or consider this note received from Steve Mallicoat, Sales Manager for Cummins Great Plains Diesel, Inc.:

> *"I just wanted to thank you for all of the special attention and extra effort that went into our Seed and Grain Project. Without your help I'm sure that things wouldn't have happened as quickly."*

The reason for this success are the superior quality of the materials we use, the increased dimensional accuracies we deliver, and the willingness and ability to modify or custom-engineer our products right to each customer's exact requirements. You see, we have no desire to become a power transmission superstore. We prefer to remain a consulting partner with our representatives and customers.

FLEXTORK® Elastomeric Flexible Couplings

The answer to drivetrain misalignment, shock loads, and torsional vibration problems.

A strong rugged coupling that meets demanding performance and quality requirements, making FLEXTORK® a natural for industrial power transmission applications. Here are some of the key Features and Advantages.

Features	Advantages
• Non-lubricated	Low Maintenance
• Easy Service and Installation	Drop out element, no need to move connected equipment
• Accommodates Misalignment	Up to 4° angular offset and .040" parallel offset
• Higher Torque Rating / Smallest Diameter Ratio	FLEXTORK® has higher torque ratings than most major competitors. In some cases as much as five times the rating.
• Cushions Shock Loads	Cushions shock that can cause damage to connected equipment
• Dampens Torsional Vibration	Absorbs and dampens torsional vibrations
• Electrically Insulated	Insulates connected shafts preventing flow of stray currents.
• Indoor and Outdoor Operation	Elements can accommodate a wide range of operating temperatures from as low as –49°F to as high as 230°F
• Hubs Shocked for TAPER-LOCK® Bushings as well as straight bores.	Accommodates TAPER-LOCK® bushing shaft sizes ½" to 4" and straight bores to 7½"

SELECTION GUIDE

1) Compute HP / 100 RPM or torque to be transmitted.

Determine HP / 100 RPM as follows:

$$\text{HP / 100 RPM} = \frac{\text{HP Transmitted x 100 x Service Factor}}{\text{RPM}}$$

or determine torque (inch pounds) as follows

$$\text{Torque} = \text{HP / 100 x 630.25 x Service Factor}$$

or

$$\text{Torque} = \frac{\text{HP Transmitted x 63025 x Service Factor}}{\text{RPM}}$$

Now determine the coupling type from section 2.

2) Important considerations for selection of coupling type:

a. Maximum permissible diameter.
b. Maximum allowable speed (RPM).
c. Max. allowable misalignment (angular and parallel).
d. Affect of inertia values.
e. Backlash limitations.
f. Noise considerations.
g. Electrical isolation.
h. Ease of service (i.e. replacement of wear elements without disturbing the alignment of driving or driven equipment).
i. Ease of installation.
j. Shock absorption capability.
k. Torsional tuning [a must for internal combustion engines (especially diesel engines) and reciprocating compressors]
l. Environmental requirements (low or high ambient temperatures no lubricant allowed, oil or chemical environment).
m. Tradition (on certain types of equipment the use of specific types of couplings has become customary).
n. Price.

3) Having now determined the required HP / 100 RPM rating and the type of coupling (gear type - sleeve or flange, elastomeric) the coupling size can now be selected from the appropriate catalog page. Compare its listed maximum bore with the specified shaft sizes of the driving and driven equipment. If one or both shaft sizes are larger than the maximum allowed bore, select a larger size coupling.

EXAMPLE:

Selection - Gear type Coupling.

Hoist application, reversing main hoist drive. Motor rating 250 HP at 1800 RPM with a 3 3/8" shaft diameter, driven shaft 2 3/4" diameter.

The service factor guide shows a value of 2.0 for main hoist drives with reversing, therefore:

$$\text{HP / 100 RPM} = \frac{250 \times 100 \times 2}{1800} = 28 \text{ HP / 100 RPM}$$

Main hoist drives traditionally employ gear couplings. Using the required HP / 100 RPM figure of 28 we could select a size 1 1/2 coupling but the maximum allowable bore is unacceptable. Therefore, a size 2 1/2 must be selected which allows a maximum bore of 3.50".

The proper choice is therefore a size 2 1/2 series F flange type, full flex double engagement coupling.

EXAMPLE:

Selection - Elastomeric Coupling.

Diesel engine driving a centrifugal blower. Engine: 4 cyl., turbocharged, rated 40 HP at 3200 RPM, with a 1 1/2" diameter flywheel stubshaft and a minimum operating speed of 1200 RPM.
Driven equipment: centrifugal blower, with a 1 3/4" shaft diameter.

The service factor guide advises to consult the factory for the proper value. A service factor of 2.0 was obtained. Therefore:

$$\text{HP / 100 RPM} = \frac{40 \times 100 \times 2}{1200} = 6.7 \text{ HP / 100 RPM.}$$

For optimum life of the engine and the driven equipment components, an elastomeric coupling should be used. Normally the diesel engine manufacturer or other capable institutions will run a torsional analysis of the system to determine the required stiffness range of the coupling. In the above case a stiffness rate of .08 x ^{6} to .6 x 10^{6} IN·LBS/Radian was considered desirable.

The FLEXTORK size 40 EL elastomeric coupling fits the above application perfectly. The coupling is rated for 10.1 HP / 100 RPM, which is above the minimum required rating of 6.7 HP / 100 RPM and the maximum bore of 2.63" is well above the required 1 3/4".
The stiffness rate also falls within the specified range.

COUNTER-CLOCKWISE ROTATION DRIVES

1) This assembly instruction sheet describes the assembly position of the element when used on counter-clockwise rotation drives, as shown. Note the arrows on the element are to point towards the bolt heads.

2) Elements with non-uniform cross sections must be mounted such that the thicker cross section is worked in compression and the thinner section is in tension, otherwise the torque carrying capacity of the element is greatly reduced.

   Elements with uniform cross sections can be mounted to the hubs in any manner desired. (Sizes 5, 20, 30, 40, 50, 60 and 70)

3) Place the supplied hardened washers under the cap screw heads and torque the screws down to the given specification.
   Keep the surfaces between the steel bushing in the elastomeric element, the hardened washer and the cap screw head free from dirt and apply a light oil or grease film to both sides of the hardened washer. This is very important since it will significantly reduce the rubber stresses around the metal bushings when torquing down the cap screws.

Rotation view from back side of motor.

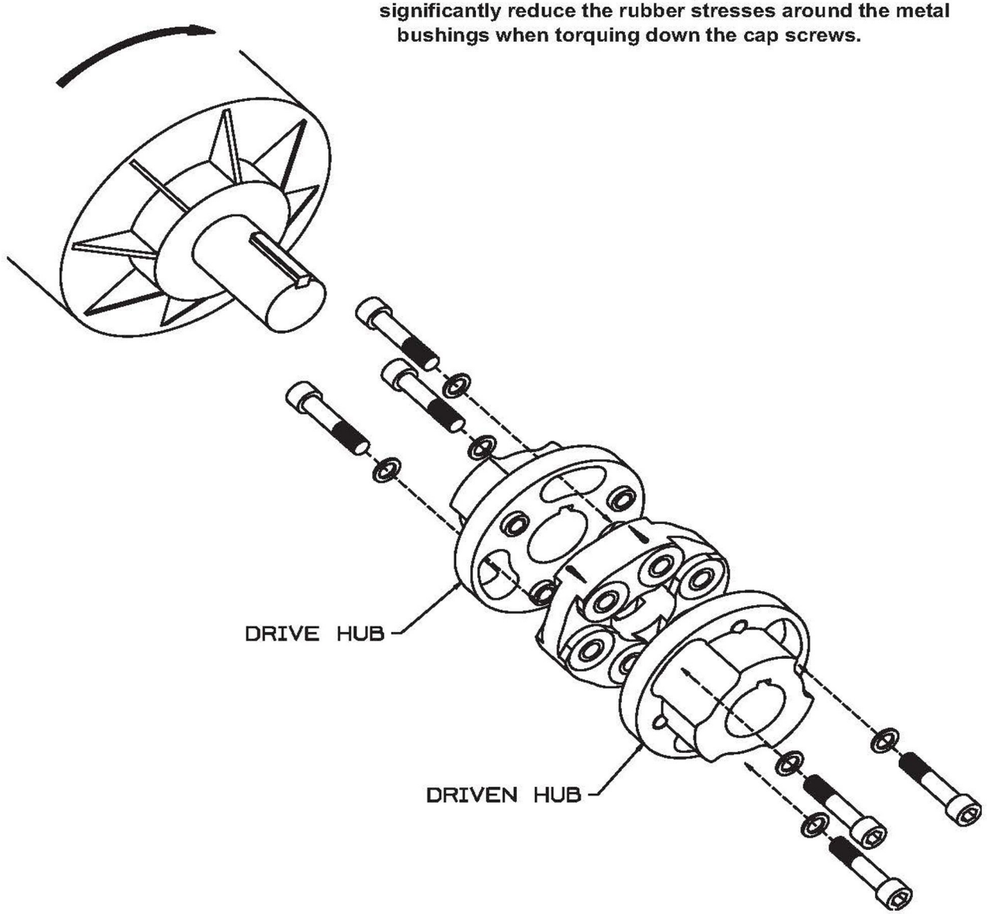

DATA SHEET DS113 REV. 07

FLEXTORK ®

Series "EL" Elastomeric Coupling - Straight Bore.

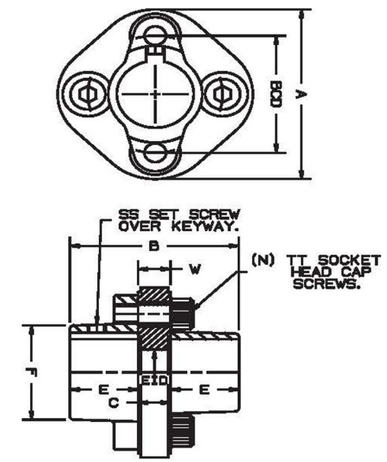

Size 5 EL Only

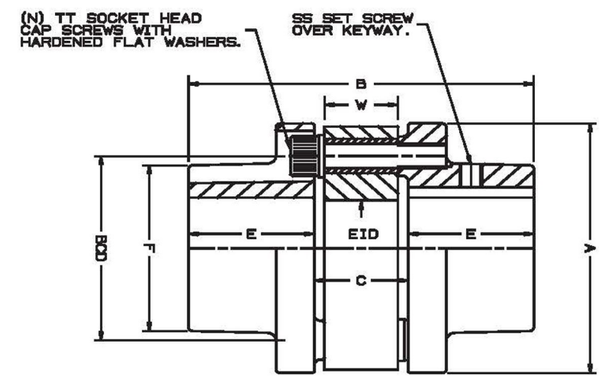

Size 20 EL And Larger

Series EL Size	5-5	20-20	20-40	30-75	30-115	30-150	40-250	50-350
Rating (HP/100 RPM)	.28	1.11	2.22	4.60	6.39	8.33	13.89	19.70
Rating (HP@1800RPM)	5	20	40	75	115	150	250	354
Torque Capacity (IN LBS x 10^3)(3)	.175	.700	1.40	2.63	4.03	5.25	8.75	12.38
Maximum Speed (RPM) (4)	12900	9400	9400	7050	7050	7050	6200	4750
Maximum Bore (5)	1.13	1.63	1.63	2.25	2.25	2.25	2.63	3.50
Standard Keyway (5)	1/4 x 1/8	3/8 x 3/16	3/8 x 3/16	1/2 x 1/4	1/2 x 1/4	1/2 x 1/4	5/8 x 5/16	7/8 x 7/16
A	2.85	4.00	4.00	5.16	5.16	5.16	5.91	7.72
B	2.47	4.42	4.73	5.69	5.69	5.89	6.73	7.38
C	.47	.92	1.23	1.56	1.56	1.76	2.00	1.88
E	1.00	1.75	1.75	2.06	2.06	2.06	2.37	2.75
EID	.77	1.54	1.54	1.97	1.97	1.77	2.16	2.75
F	1.65	2.75	2.75	3.60	3.60	3.60	4.18	5.30
BCD	1.982	2.953	2.953	3.780	3.780	3.780	4.331	5.512
SS	M4	M6	M6	M8	M8	M8	M8	M12
N	4	6	6	6	6	6	6	6
TT	M8	M10	M10	M10	M12	M12	M14	M18
W	.47	.63	.94	1.18	1.18	1.38	1.57	1.30
Rough Stock Bore	-	-	-	-	-	-	-	1.90
Weight Solid Hubs (LBS)	1.25	6.5	6.5	14.5	14.5	14.5	22	39
Bolt Tightening Torque (FT LBS)	15	31	31	31	58	58	88	188

Notes:
(1) Maximum angular misalignment : Size 5 EL 8°, Size 20 EL and larger 3°.
(2) Maximum offset misalignment up to .04"
(3) Continuous load rating is based on a 1.0 x Safety factor.
Maximum peak load rating is 4.0 x continuous load rating.
(4) Maximum speed 60% of value shown without dynamic balancing.
(5) Coupling furnished with Class 1 clearance fit bores with one keyway and one set screw over the keyway per hub unless otherwise specified.
Finish bores and keyways are per AGMA 9002-A86 commercial standards.

FLEXTORK®

DATA SHEET DS141 REV. 03

Series "EL" Couplings - Sizes 60 thru 130

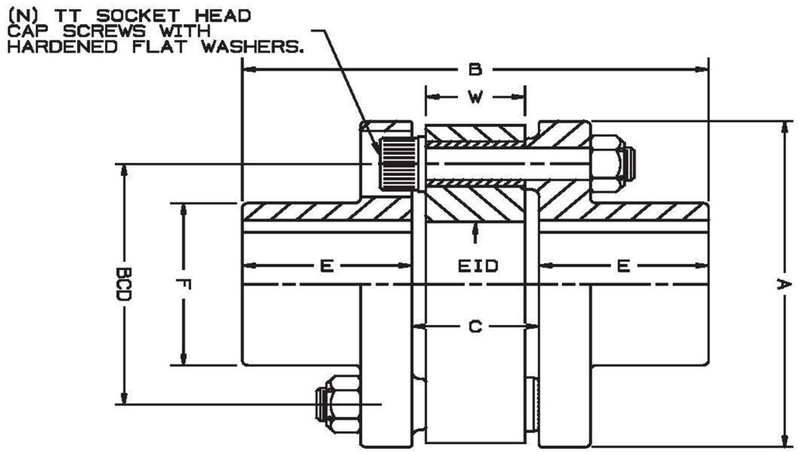

Series EL Size	60-463	65-560	70-910	80-1441	90-2095	100-2908	110-3793	120-4804	130-6068
Rating (HP/100 RPM)	25.72	31.10	50.57	80.07	116.41	161.55	210.71	266.9	337.14
Rating (HP@1800 RPM)	463	560	910	1441	2095	2908	3793	4804	6068
Torque Capacity (IN·LBS x 10^3)(2)	16.20	19.60	31.86	50.45	73.34	101.78	132.75	168.15	212.40
Maximum Speed (RPM) (3)	3600	3600	3000	2400	2100	1800	1650	1450	1350
Maximum Bore (4)	4.00	5.00	5.50	8.25	10.00	12.50	13.75	16.00	18.00
Standard Keyway (4)	1 x 1/2	1-1/4 x 5/8	1-1/4 x 5/8	2 x 3/4	2-1/2 x 7/8	3 x 1	3-1/2 x 1-1/4	4 x 1-1/2	4 x 1-1/2
A	10.25	11.00	12.75	15.25	17.68	20.19	22.63	25.16	27.75
B	10.44	10.44	13.44	13.94	13.94	14.19	14.19	14.69	15.19
C	2.19	2.19	2.19	2.19	2.19	2.19	2.19	2.19	2.19
E	4.13	4.13	5.63	5.88	5.88	6.00	6.00	6.25	6.50
EID	4.40	4.92	6.61	9.25	11.85	14.44	16.93	19.49	22.00
F	6.00	6.78	8.00	Dependant on shaft sizes - Per Order Basis.					
BCD	7.874	8.661	10.276	12.756	15.197	17.717	20.157	22.677	25.157
N	6	6	8	10	12	14	16	18	20
TT	M24	M24	M24	M24	M24	M24	M24	M24	M24
W	1.42	1.46	1.46	1.46	1.46	1.46	1.46	1.46	1.46
Rough Stock Bore	1.95	1.95	2.38	Dependant on shaft sizes - Per Order Basis.					
Max. Angular Misalignment (DEG)	3	3	3	2	2	2	1	1	1
Bolt Tightening Torque (FT·LBS)	450	450	450	500	500	500	500	500	500

Notes:
(1) Maximum offset misalignment up to .04"
(2) Continuous load rating is based on a 1.0 x Safety factor
Maximum peak load rating is 4.0 x continuous load rating
(3) Maximum speed 60% of value shown without dynamic balancing.
(4) Customer to specify if coupling is to be furnished with interference fit or furnished with Class 1 clearance fit bores with one keyway and one set screw over the keyway per hub unless otherwise specified. Finish bores and keyways are per AGMA 9002-A86 commercial standards.

CLOCKWISE ROTATION DRIVES

1) This assembly instruction sheet describes the assembly position of the element when used on clockwise rotation drives, as shown. Note the arrows on the element are to point towards the threaded holes in the hubs.

2) Elements with non-uniform cross sections must be mounted such that the thicker cross section is worked in compression and the thinner section is in tension, otherwise the torque carrying capacity of the element is greatly reduced.

Elements with uniform cross sections can be mounted to the hubs in any manner desired. (Sizes 5, 20, 30, 50, 60 and 70)

3) Place the supplied hardened washers under the cap screw heads and torque the screws down to the given specification.
Keep the surfaces between the steel bushing in the elastomeric element, the hardened washer and the cap screw head free from dirt and apply a light oil or grease film to both sides of the hardened washer. This is very important since it will significantly reduce the rubber stresses around the metal bushings when torquing down the cap screws.

Rotation view from back side of motor.

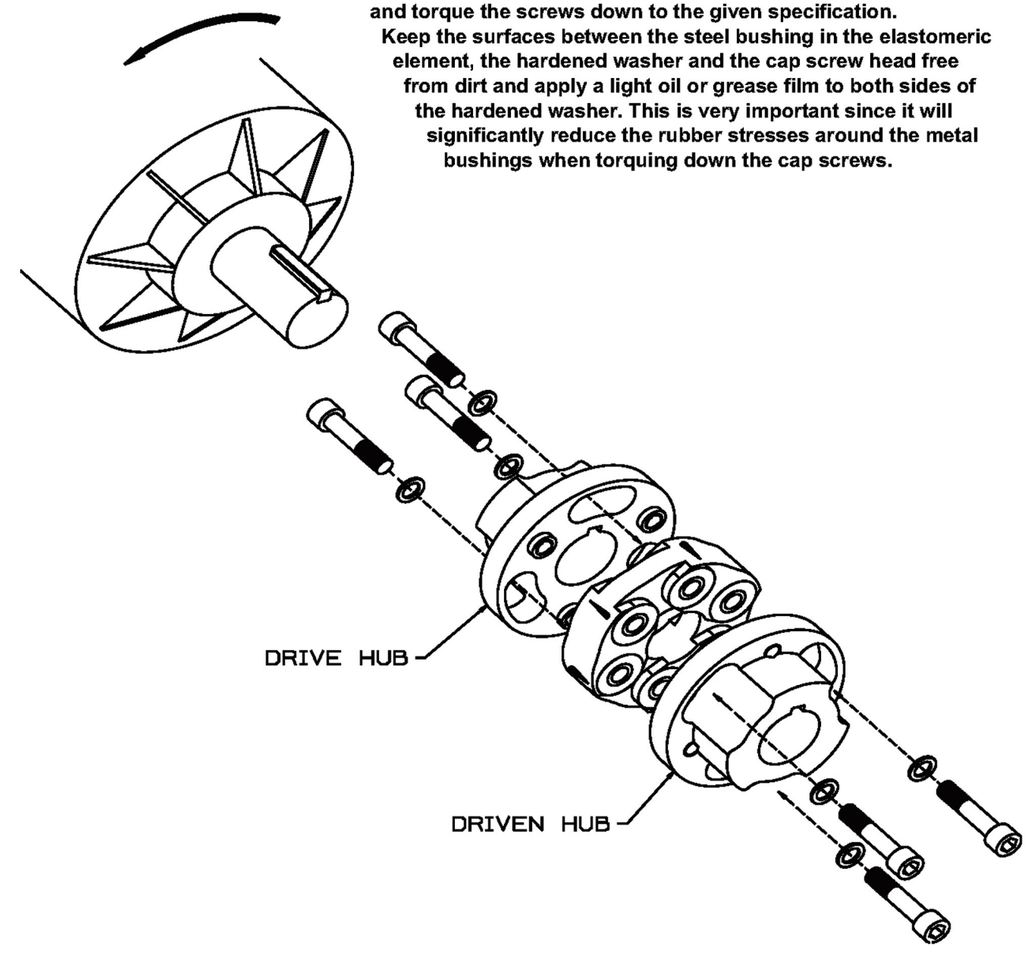

DATA SHEET DS113 REV. 07

FLEXTORK ®

SERIES "EL" - COUPLING INSTALLATION AND MAINTENANCE INSTRUCTIONS.

INSTALLATION

1) Make sure that all the proper coupling parts, keys, etc. are on hand.
2) Make sure that the prime mover is disconnected from the power source so that it cannot be started accidentally during installation.
3) Remove dirt and burrs from the shafts and coat with a suitable anti-galling lubricant.
4) Insert keys in shaft keyways. Keys should have a snug fit to the sides of the keyways with slight clearance top to bottom. Mount hubs on the shafts and snug up the set screws over the keyways and/or TAPER-LOCK® bushings.
5) Align the shafts by placing the machines in their approximate positions. (Refer to Table No. 1 for the correct shaft separation.) It is possible to make the shaft separation smaller than the width of the elastomeric element, provided the shaft sizes are not larger than the inside diameter of the element. Doing so is not recommended as it will not allow replacement of the elastomeric element without unbolting the driving or driven equipment, thereby disturbing the alignment.
8) Align the shafts. Best coupling performance is obtained when the alignment is checked with dial indicators.

NOTE: Always rotate the hub on which the indicator is mounted.

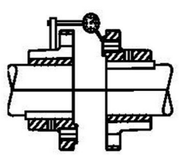

Figure 1.

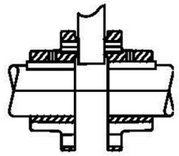

Figure 2.

A. Angular Alignment.
Check by mounting indicator on the body of one hub and placing the pointer on the raised pad face of the other hub. (See Figure 1.) Adjust machines until the best possible alignment is obtained. As an alternate method, insert a feeler gage between the hubs at 4 points approximately 90° apart and adjust the machines. (See Figure 2.) When checking the angular alignment, both hubs may need to be rotated simultaneously.

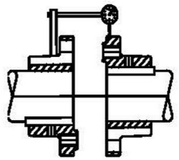

Figure 3.

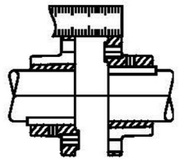

Figure 4.

B. Parallel Alignment.
Mount the indicator on the body of one hub and place the pointer on the flange of the other hub. (See Figure 3.) Adjust machines until the indicator reading is the same at 4 points approximately 90° apart. As an alternate alternate method, place a straight edge across one hub flange and adjust the machines until the straight edge rests squarely on the other hub flange. (See Figure 4.) This should be done at 90° intervals around the hub.

Securely tighten foundation bolts and recheck the alignment. Adjust the machines again, if necessary.

9) Assemble Coupling.
Loosen the set screws over the keyways or loosen the lock screws on the TAPER-LOCK® bushings and place the elastomeric element between the hub flanges. (See reverse side for element mounting procedure) Place the supplied hardened washers under the cap screw heads and torque the screws down to the given specification. Keep the surfaces between the steel bushing in the elastomeric element, the hardened washer and the cap screw head free from dirt and apply a light oil or grease film to both sides of the hardened washer. This is very important since it will significantly reduce the rubber stresses around the metal inserts when torquing down the cap screws.

Tighten the set screws over the keyways or tighten the lock screws on the TAPER-LOCK® bushings.

MAINTENANCE

1) It is advisable to keep excessive grease and oil away from the elastomeric element, unless special highly oil resistant elements have been requested.
2) When severe operating conditions are encountered, especially when the prime movers are diesel engines with 4 or fewer cylinders, the tension on the bolts should be checked every 6 months with a torque wrench. The same applies to the set screws over keyways or to TAPER-LOCK® bushings.
3) When bolts have been removed more then 10 times, the self locking nylon coating could wear off, therefore, it is recommended that new bolts be installed to avoid the possibility of bolts loosening and backing out during severe operating condition.

Table No. 1

Series "EL" Size	5	20-20	20-40	30-75	30-115	30-150	40-250	50-350	60-463	65-560	70-936
Shaft Separation	.47	.92	1.23	1.56	1.56	1.76	2.00	1.89	2.19	2.19	2.19
Bolt Torque FT LBS	20	31	31	31	58	58	88	188	300	450	450

CAUTION: INSTALL GUARDS AROUND COUPLING ACCORDING TO LOCAL AND NATIONAL CODES.

TAPER-LOCK® is a registered trademark of DODGE / Reliance Electric Co.

FLEXTORK ®

Series "EL" Elastomeric Coupling - Bored for TAPER-LOCK® Bushing

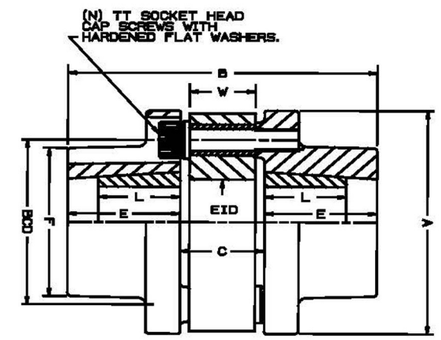

Inboard Mount

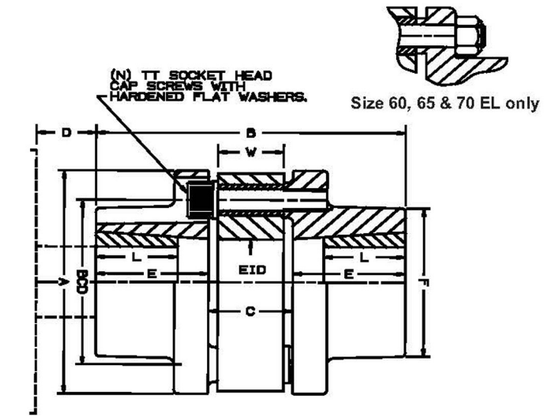

Outboard Mount

Series EL Size	20-20	20-40	30-75	30-115	30-150	40-250	50-350	60-463	65-560	70-910
Rating (HP/100 RPM)	1.11	2.22	4.60	6.39	8.33	13.89	19.70	25.72	31.10	50.57
Rating (HP@1800RPM)	20	40	75	115	150	250	354	463	560	910
Torque Capacity (IN LBS x 10^3)(3)	.700	1.30	2.63	3.55	3.55	4.30	12.38	16.20	19.60	32.77
Maximum Speed (RPM) (4)	9400	9400	7050	7050	7050	6200	4750	3600	3600	3000
TAPER-LOCK® Bushing number	1108	1108	1215	1215	1215	1615	2012	3030	3535	4040
Bushing Bore Range	1/2 to 1-1/8	1/2 to 1-1/8	1/2 to 1-1/4	1/2 to 1-1/4	1/2 to 1-1/4	1/2 to 1-5/8	1/2 to 2	15/16 to 3	1-3/16 to 3-1/2	1-7/16 to 4
A	4.00	4.00	5.16	5.16	5.16	5.91	7.72	10.25	11.00	12.75
B	4.42	4.73	5.69	5.69	5.89	6.73	7.69	10.44	10.44	13.44
C	.92	1.23	1.56	1.56	1.76	2.00	1.89	2.19	2.19	2.19
E	1.75	1.75	2.06	2.06	2.06	2.37	2.75	4.13	4.13	5.63
EID	1.54	1.54	1.97	1.97	1.77	2.16	2.75	4.40	4.92	6.61
F	2.75	2.75	3.60	3.60	3.60	4.18	5.30	6.00	6.78	8.00
L	.88	.88	1.50	1.50	1.50	1.50	1.25	3.00	3.50	4.00
BCD	2.953	2.953	3.780	3.780	3.780	4.331	5.512	7.874	8.661	10.276
N	6	6	6	6	6	6	6	6	6	8
TT	M10	M10	M10	M12	M12	M14	M18	M24	M24	M24
W	.63	.94	1.18	1.18	1.38	1.57	1.30	1.42	1.46	1.46
Weight Solid Hubs (LBS)	6.5	6.5	14.5	14.5	14.5	22	39	107	116	260
Bolt Tightening Torque (FT LBS)	25	25	25	42	42	68	150	300	300	300

Notes:
(1) Maximum angular misalignment : 3°.
(2) Maximum offset misalignment up to .04"
(3) Continuous load rating is based on a 1.0 x Safety factor.
Maximum coupling peak load rating is 4.0 x continuous load rating.
For maximum bushing peak load rating refer to bushing manufacturer.
Refer to bushing manufacturers service factor guide.
(4) Maximum speed 60% of value shown without dynamic balancing.
(5) TAPER-LOCK® is a registered trademark of DODGE/Reliance Electric Co.
(6) Space required to remove bushing with short key.
(7) Coupling supplied less bushing.

CROSS REFERENCE GUIDE

ELASTOMERIC COUPLINGS

1750 RPM NEMA MOTORS			SYSTEM COMPONENTS FLEXTORK			FALK TORUS			DODGE PARAFLEX			T.B. WOODS SUREFLEX			REXNORD OMEGA			KOP-FLEX ELASTOMERIC		
HP	FRAME	SHAFT DIA.	SIZE	MAX. BORE T.L.	MAX. BORE B.B.S.	SIZE	MAX. BORE T.L.	MAX. BORE B.B.S.	SIZE	MAX. BORE T.L.	MAX. BORE B.B.S.	SIZE	MAX. BORE Q.D.	MAX. BORE B.B.S.	SIZE	MAX. BORE T.L.	MAX. BORE B.B.S.	SIZE	MAX. BORE T.L.	MAX. BORE B.B.S.
1/2	143T	7/8	5-5		1.13	20WA	1.13	1.38	PB40	1.13		3J		.88	E2		1.13	20		1.13
			20-20	1.13											E4	1.00		30	1.13	
3/4	143T	7/8	5-5		1.13	20WA	1.13	1.38	PB40	1.13		3J		.88	E2		1.13	20		1.13
			20-20	1.13											E4	1.00		30	1.13	
1	143T	7/8	5-5		1.13	20WA	1.13	1.38	PB40	1.13		3J		.88	E2		1.13	20		1.13
			20-20	1.13											E4	1.00		30	1.13	
1-1/2	145T	7/8	5-5		1.13	20WA	1.13	1.38	PB40	1.13		4J		1.00	E2		1.13	20		1.13
			20-20	1.13											E4	1.00		30	1.13	
2	145T	7/8	5-5		1.13	20WA	1.13	1.38	PB40	1.13		4J		1.00	E2		1.13	20		1.13
			20-20	1.13											E4	1.00		30	1.13	
3	182T	1-1/8	5-5		1.13	20WA	1.13	1.38	PX50	1.13	1.38	5J		1.13	E2		1.13	20		1.13
			20-20	1.13											E5	1.13		30	1.13	
5	184T	1-1/8	5-5		1.13	20WA	1.13	1.38	PX60	1.38	1.63	5J		1.13	E2		1.13	20		1.13
			20-20	1.13											E5	1.13		30	1.13	
7-1/2	213T	1-3/8	20-20		1.63	20WA		1.38	PX60	1.38	1.63	6J		1.38	E3		1.38	30		1.50
			40-185	1.63		40WA	1.38					8	1.38		E10	1.38		50	1.63	
10	215T	1-3/8	20-20		1.63	20WA		1.38	PX60	1.38	1.63	6J		1.38	E3		1.38	30		1.50
			40-185	1.63		40WA	1.38					8	1.38		E10	1.38		50	1.63	
15	254T	1-5/8	20-20		1.63	30WA		1.63	PX70	1.63	2.13	8S		1.94	E4		1.63	40		1.88
			40-185	1.63		50WA	1.63					9S	1.69		E20	1.63		50	1.63	
20	256T	1-5/8	20-20		1.63	40WA		1.88	PX70	1.63	2.13	8S		1.94	E5		1.88	40		1.88
			40-185	1.63		50WA	1.63					9S	1.69		E20	1.63		50	1.63	
25	284T	1-7/8	20-40		2.25	40WA		1.88	PX70		2.13	8S		1.94	E5		1.88	50		2.13
			50-325	2.00		60WA	2.00		PX80	2.00		10S	2.13		E20	1.63		60	2.00	
30	286T	1-7/8	30-36		2.25	50WA		2.19	PX70		2.13	9S		2.38	E10		2.13	50		2.13
			50-325	2.00		60WA	2.00		PX80	2.00		10S	2.13		E30	2.00		60	2.00	
40	324T	2-1/8	30-60		2.25	50WA		2.19	PX70		2.13	9S		2.38	E10		2.13	60		2.88
			60-463	3.00		70WA	2.50		PX90	2.50	2.75	10S	2.13		E40	2.50		70	2.50	
50	326T	2-1/8	30-60		2.25	60WA		2.50	PX80		2.56	10S	2.13	2.75	E20		2.38	60		2.88
			60-463	3.00		70WA	2.50		PX90	2.50					E40	2.50		70	2.50	
60	364T	2-3/8	40-185		2.63	60WA		2.50	PX80		2.56	10S		2.75	E20		2.38	70		3.00
			60-463	3.00		70WA	2.50		PX90	2.50		12S	2.75		E40	2.50			2.50	
75	365T	2-3/8	40-185		2.63	70WA	2.50	3.00	PX80		2.56	11S		3.38	E30		2.88	70		3.00
			60-463	3.00					PX90	2.50		12S	2.75		E40	2.50			2.50	
100	404T	2-7/8	50-325		3.50	70WA		3.00	PX100		3.25	11S		3.38	E30		2.88	70		3.00
			60-463	3.00		90WA	3.00		PX120	3.00		13S	3.25		E60	3.00		80	3.00	
125	405T	2-7/8	50-325		3.50	80WA		3.50	PX100		3.25	12S		3.88	E40		3.38	70		3.00
			60-463	3.00		90WA	3.00		PX120	3.00		13S	3.25		E60	3.00		80	3.00	
150	444T	3-3/8	50-325		3.50	90WA		4.00	PX110		3.94	12S		3.88	E40		3.38	80		3.75
			70-910	4.00		100WA	3.50		PX140	3.94		16S	3.75		E70	3.50		90	3.50	
200	445T	3-3/8	50-325		3.50	90WA		4.00	PX110		3.94	13S		4.50	E50		3.63	80		3.75
			70-910	4.00		100WA	3.50		PX140	3.94		16S	3.75		E70	3.50		90	3.50	
250	505U	3-3/8	50-325		3.50	90WA		4.00	PX120		4.00	13S		4.50	E60		4.00	90	3.50	4.75
			70-910	4.00		100WA	3.50		PX140	3.94		16S	3.75		E70	3.50				
300	584U	3-7/8	60-463		5.25	90WA		4.00	PX120		4.00	14S		5.00	E60		4.00	90	3.50	4.75
			70-910	4.00		110WA	4.00		PX140	3.94					E80	4.00				
350	585U	3-7/8	60-463		5.25	90WA		4.00	PX140		4.50	14S		5.00	E70		4.50	90	3.50	4.75
			70-910	4.00		110WA	4.00			3.94					E80	4.00				

NOTES:

1) T.L. = TAPER-LOCK® bushing. TAPER-LOCK® is a registered trademark of DODGE / Reliance Electric Co.
2) B.B.S. = Bored To Size with square key.
3) Q.D. = Quick Disconnect Bushing.
4) This guide shows proper coupling selection for 1750 RPM NEMA frame motors on centrifugal pump applications. Manufacturers recommendeed service factors have been applied.

OTHER COUPLINGS AVAILABLE

SERIES "EL"

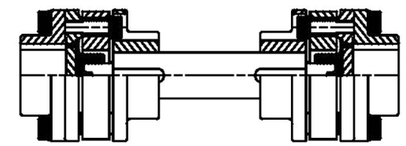

o Floating Shaft Couplings

Floating shaft couplings accommodate applications having an increased distance between shaft ends. The offset misalignment capacity of the coupling increases proportionately with the increased shaft separation. Removal of the shaft is performed by unbolting the hubs mounted on the equipment shafts and dropping out the center section of the shaft.

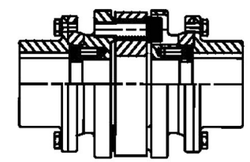

o Drop-Out Spacer Couplings

Applications requiring spacer type couplings such as motor driven back-pull-out pumps, AVS pumps, process pumps, etc. This coupling allows for easy removal of the center drop out section, enabling routine pump back-pull-out section maintenance with a minimal amount of downtime.
The coupling design allows for replacement of drop out sections from other manufacturers without replacing the existing outboard hubs.

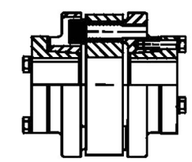

o Couplings Bored For Bushings

The couplings can be bored to suit several styles of bushings.

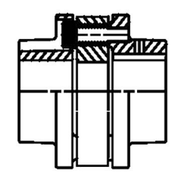

o Pin Style Couplings

The element is fastened to one coupling hub with the standard fasteners, while the other hub contains drive pins which connect the hub to the element. This feature allows for simple and quick removal of the connected equipment, or for blind assembly applications.

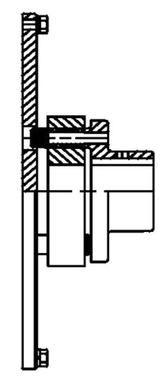

o Flywheel Mount Couplings

Mounting plates to suit flywheel mounts of several motor and flywheel types.